Rugged Tablet

MDT880

8 Inch **5G** Rugged Android Vehicle Display Terminal

User Manual

Version 1.1



Topicon HK Limited
2314-2316, Tower C, Huangdu Plaza, Yitian Road, Futian District, Shenzhen 518048, China

Revision History

Version	Release Time	Description
1.0	202512	Initial Release
1.1	202607	Add CRD880, CRD880-CAN and CRD880-M12 cradle

Copyright

Copyright © Topicon HK Limited. All Rights Reserved. This document contains proprietary information protected by copyright.

About This Manual

This user's manual provides the general information and installation instructions for the product. The manual is meant for the experienced users and integrators with hardware knowledge of personal computers. If you are not sure about any description in this manual, consult your vendor before further handling.

We recommend that you keep one copy of this manual for the quick reference for any necessary maintenance in the future.
Thank you for choosing TOPICON Tablet products.

Safety Precautions

If the device has been stored for more than three months, charge and discharge it once at room temperature before use.
Do not attempt to repair, disassemble, or modify the device. Doing so without the appropriate knowledge and precautions may result in a dangerous situation or permanent damage.

Do not operate the device in extreme temperatures. Doing so may damage the battery and shorten product life. Avoid prolonged exposure to direct sunlight.

Topicon HK Limited
2314-2316, Tower C, Huangdu Plaza, Yitian Road, Futian District, Shenzhen 518048, China

Table of Contents

Chapter 1: Product Overview 5

1.1 Product Introduction 5

1.2 Key Features and Specifications 5

1.3 Parts of the Device 6

Chapter 2: Accessories and Expansion Options 7

2.1 Connect Different Cradles 7

2.1.1 CRD880-CAM-FULL Cradle 9

2.1.2 CRD880 Cradle 11

2.1.3 CRD880-CAN Cradle 13

2.1.4 CRD880-M12 Cradle 13

2.1.5 CRD865-BAS Cradle 15

2.1.6 BKT865 Metal Bracket 16

2.1.7 BKT865-LAN Metal Bracket 18

2.2 Cradle Cable Pin Assignment Overview 19

2.2.1 CAB-865-2RS232 20

2.2.2 CAB-EX-RS232 21

2.2.3 CAB-HUB-BASIC 22

2.2.4 CAB-BMW-BASIC 22

2.2.5 CAB-BMW-CAN 23

2.2.6 CAB-MB-FULL 24

2.2.7 CAB-EX-FULL 25

2.2.8 CAB-EX-HUB 26

2.2.9 CAB-OTG-BASIC 27

2.2.10 CAB-EX-BASIC 27

2.2.11 CAB-865-BASIC 28

2.2.12 CAB-EX-2M/ CAB-EX-5M 29

2.2.13 BKT865-BAS-01 30

2.2.14 BKT865-BAS-02 31

Topicon HK Limited
2314-2316, Tower C, Huangdu Plaza, Yitian Road, Futian District, Shenzhen 518048, China

2.2.15 BKT865-BAS-BMW 31
2.2.16 CAB-EX-DB9 32
2.3 Accessories 33
2.3.1 Cradles 33
2.3.2 Expansion Modules 34
2.3.3 Chargers 35
2.3.4 Other Accessories 35
Chapter 3: Getting Started 37
3.1 Power On/Off and Sleep/Wake 37
3.2 Installing Micro SD Card and SIM Card 38
3.3 Charging the Battery 38
3.4 Charging via Vehicle Power Supply 39
Chapter 4: Hand Strap and Carrying Options 40
4.1 Hand strap 40
4.2 Shoulder strap mode 42
Chapter 5: Cradle Usage Instructions 43
5.1 Using as a Vehicle Cradle 43
5.2 Using as a Desktop Dock Station 44
Chapter 6: Using Hardware Interfaces 46
6.1 Using Serial Ports 46
6.2 Using GPIO (Only supported on CRD880 cradle) 47
6.3 Using NFC Function 47
6.4 Using eSIM Function 48
Chapter 7: Specifications 51
Chapter 8: Software Support 53
Chapter 9: Radio Parameters 54
Chapter 10: Safety and Regulatory Compliance 56

Topicon HK Limited
2314-2316, Tower C, Huangdu Plaza, Yitian Road, Futian District, Shenzhen 518048, China

Chapter 1: Product Overview

1.1 Product Introduction

The MDT880 is a rugged Android tablet built for professional mobility across vehicle, field, and fixed-site applications.

Designed to operate reliably in demanding environments, it integrates powerful processing, robust wireless communication, and a durable industrial-grade housing.

The flexible cradle-based design enables use as both an in-vehicle terminal and a docked workstation, supporting diverse operational workflows.

1.2 Key Features and Specifications

- **MediaTek 64-bit octa-core processor**
  (2× Arm Cortex-A76 up to 2.2 GHz, 6× Arm Cortex-A55 up to 2.0 GHz)
- **Android 14 or Android 16 operating system with GMS / without GMS**
- **IP67-rated dust and water resistance**
- **Wireless connectivity support including Wi-Fi, Bluetooth, 5G, and GNSS**
- **Built-in 8000 mAh rechargeable battery**
- **8-inch MIPI LCD display with 1280 × 800 resolution, 1000 nits, anti-glare**
- **Multi-point capacitive touchscreen**
- **Drop resistance up to 1.2 m (4 ft.) in accordance with MIL-STD-810H**
- **2-in-1 cradle design supporting both vehicle mounting and desktop use**

Topicon HK Limited
2314-2316, Tower C, Huangdu Plaza, Yitian Road, Futian District, Shenzhen 518048, China

1.3 Parts of the Device

This section describes the external components, buttons, and interfaces of the MDT880.

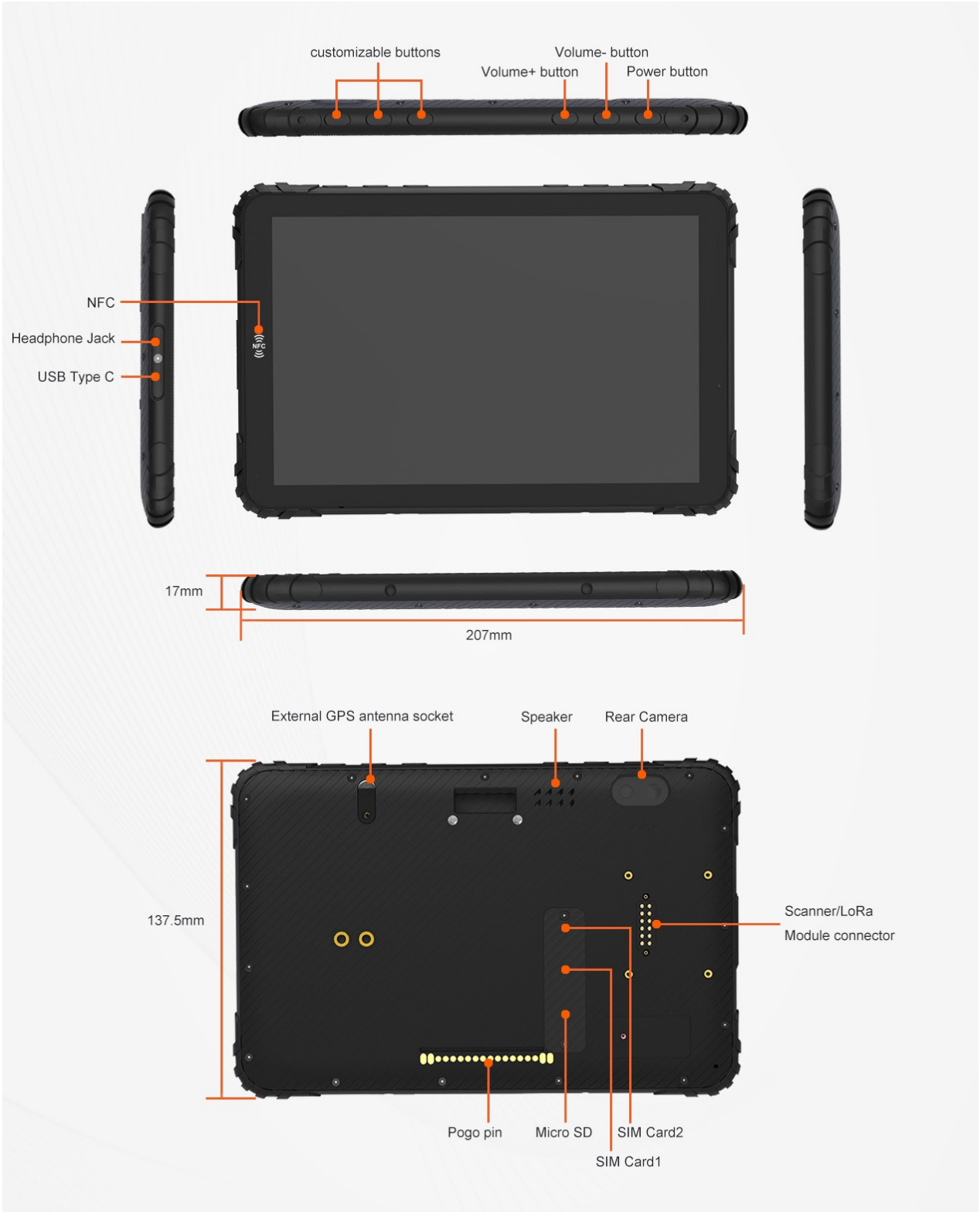

Topicon HK Limited
2314-2316, Tower C, Huangdu Plaza, Yitian Road, Futian District, Shenzhen 518048, China

Chapter 2: Accessories and Expansion Options

2.1 Connect Different Cradles

Summary of functions achieved by cradles and cables combination			
Links	**Cradles**	**Cables**	**Features**
CRD880-CAM-FULL (TYPE-A)		CAB-865-2RS232 CAB-EX-RS232 CAB-BMW-BASIC CAB-EX-BASIC	● VCC /IGN DC9-36V input* ● 2× USB-A (OTG) ● 1× USB-C (Charge) ● 1× RJ45(Ethernet) ● 1× RS232 (CPU) ● 1× RS232/RS485 (USB) ● 4× GPIO (2× Input, 1× Output, 1× ADC) ● 4× Camera (Video input) ● 4× Trigger ● 1× CAN Bus
CRD880-CAM-FULL (TYPE-B)		CAB-865-2RS232 CAB-EX-RS232 CAB-BMW-CAN CAB-EX-BASIC	● VCC /IGN DC9-36V input* ● 2× USB-A (OTG) ● 1× USB-C (Charge) ● 1× RJ45 (Ethernet) ● 1× RS232 (CPU) ● 1× RS232 / RS485 (USB) ● 5× GPIO (3× Input, 1× Output, 1× ADC) ● 2× CAN Bus ● 4× Camera (Video input) ● 4× Trigger
CRD880 (TYPE-A)		CAB-865-2RS232 CAB-EX-RS232 CAB-BMW-BASIC CAB-EX-BASIC	● VCC /IGN DC9-36V input ● 2× USB-A (OTG) ● 1× USB-C (Charge) ● 1× RJ45(Ethernet) ● 1× RS232 (CPU) ● 1× RS232/RS485 (USB) ● 4× GPIO (2× Input, 1× Output, 1× ADC)
CRD880 (TYPE-B)		CAB-865-BASIC CAB-BMW-BASIC CAB-EX-BASIC	● VCC /IGN DC9-36V input ● 1× RS232 ● 2× USB-A (OTG) ● 1× USB-C (Charge) ● 1× RJ45(Ethernet)
CRD880-CAN		CAB-865-2RS232 CAB-EX-RS232 CAB-BMW-CAN CAB-EX-BASIC	● VCC /IGN DC9-36V input ● 2× USB-A (OTG) ● 1× USB-C (Charge) ● 1× RJ45 (Ethernet) ● 1× RS232 (CPU) ● 1× RS232 / RS485 (USB) ● 5× GPIO (3× Input, 1× Output, 1× ADC) ● 2× CAN Bus
CRD880-M12 (TYPE-A)		CAB-865-2RS232 CAB-EX-RS232 CAB-BMW-BASIC CAB-EX-BASIC M12 to RJ45 conversion female cable	● VCC /IGN DC9-36V input ● 2× USB-A (OTG) ● 1× USB-C (Charge) ● 1× M12 (Ethernet) ● 1× RS232 (CPU) ● 1× RS232 / RS485 (USB) ● 4× GPIO (2× Input, 1× Output, 1× ADC)

Topicon HK Limited
2314-2316, Tower C, Huangdu Plaza, Yitian Road, Futian District, Shenzhen 518048, China

CRD880-M12 (TYPE-B)		CAB-865-BASIC CAB-BMW-BASIC CAB-EX-BASIC M12 to RJ45 conversion female cable	● VCC /IGN DC9-36V input ● 1× M12 (Ethernet) ● 1× RS232 ● 2× USB-A (OTG) ● 1× USB-C (Charge)
CRD865-BAS (TYPE-A)		CAB-865-BASIC CAB-BMW-BASIC CAB-EX-BASIC	● VCC /IGN DC9-36V input ● 1× RS232
CRD865-BAS (TYPE-B)		CAB-865-BASIC CAR-865-BMW (Car charger)	● Input DC 12V/24V
CRD865-BAS (TYPE-C)		CAB-OTG-BASIC CAB-EX-BASIC	● VCC /IGN DC9-36V input ● 1× USB-A (OTG) ● 1× RS232
BKT865-IP		BKT865-BAS-02 (Waterproof connector)	● VCC /IGN DC9-36V input ● 1× RS232
BKT865-BMW		CAB-BMW-BASIC CAB-EX-BASIC	● VCC /IGN DC9-36V input ● 1× RS232
BKT865-OTG		CAB-EX-BASIC One USB-A OTG female connector on the cradle cable.	● VCC /IGN DC9-36V input ● 1× RS232 ● 1× USB-A (OTG)
BKT865-LAN-01		CAB-LAN-01 CAB-BMW-BASIC CAB-EX-BASIC M12 to RJ45 female adapter cable.	● VCC /IGN DC9-36V input ● 1× USB-C (Charge) ● 1× M12 connector (Ethernet) ● 1× RS232
BKT865-LAN-02		USB-C to C cable	● 1× USB-C (Charge) ● 1× RJ45(Ethernet)**(optional)** ● 1× 1D/2D Barcode Scanner

* Video input: input voltage 11-36 V, as the input must stay above 11 V to power the camera. All other input: 9-36 V.

Topicon HK Limited
2314-2316, Tower C, Huangdu Plaza, Yitian Road, Futian District, Shenzhen 518048, China

2.1.1 CRD880-CAM-FULL Cradle

CRD880-CAM-FULL cradle interface

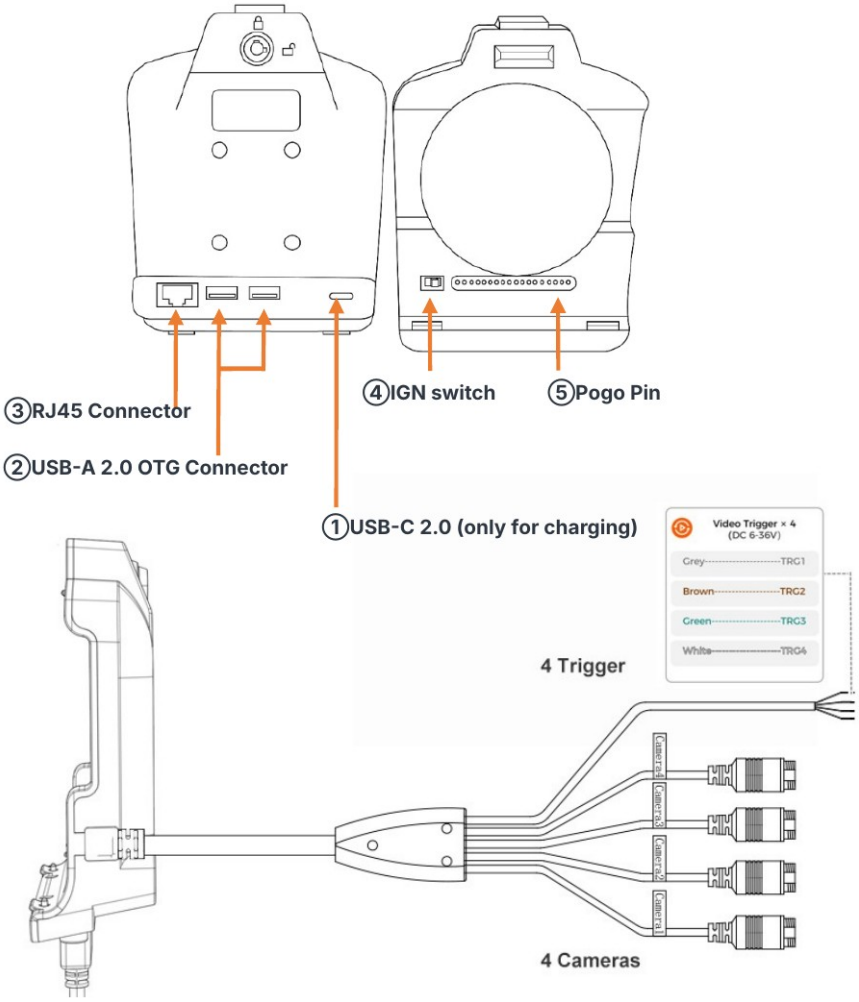

CRD880-CAM-FULL Cradle Features

- Vehicle Input: DC9V to 36V*, ignition control with optional switch in the cradle
- PD Fast-charging AC adapter or charge input 5V/3A, 9V/2A, 12V/2A with USB-C connector.
- USB 2.0 OTG Connector x 2
- RJ45 connector for Ethernet
- 4 channels camera (supported Analog, AHD 720P and 1080P camera) and 4 Triggers.

◆ **Note:** The system supports connecting multiple cameras, but all connected cameras must be of the same type.

- IGN switch: when set to the right, charging is independent of ignition; when set to the left, charging requires ignition ON. If IGN switch is switched to the left side, charging is dependent on ignition ON.

Topicon HK Limited
2314-2316, Tower C, Huangdu Plaza, Yitian Road, Futian District, Shenzhen 518048, China

2.1.1.1 CRD880-CAM-FULL cradle with basic features cable

TYPE-A: It provides 2x USB-A (OTG), 1x USB-C (Charging), 1x RJ45 (Ethernet), 1x RS232, 1x RS232/RS485 (RS232 by default), 4x GPIO (2x Input, 1x Output, 1x ADC), 1x CAN Bus, 4x Video Inputs (Camera), and 4x Video Triggers.

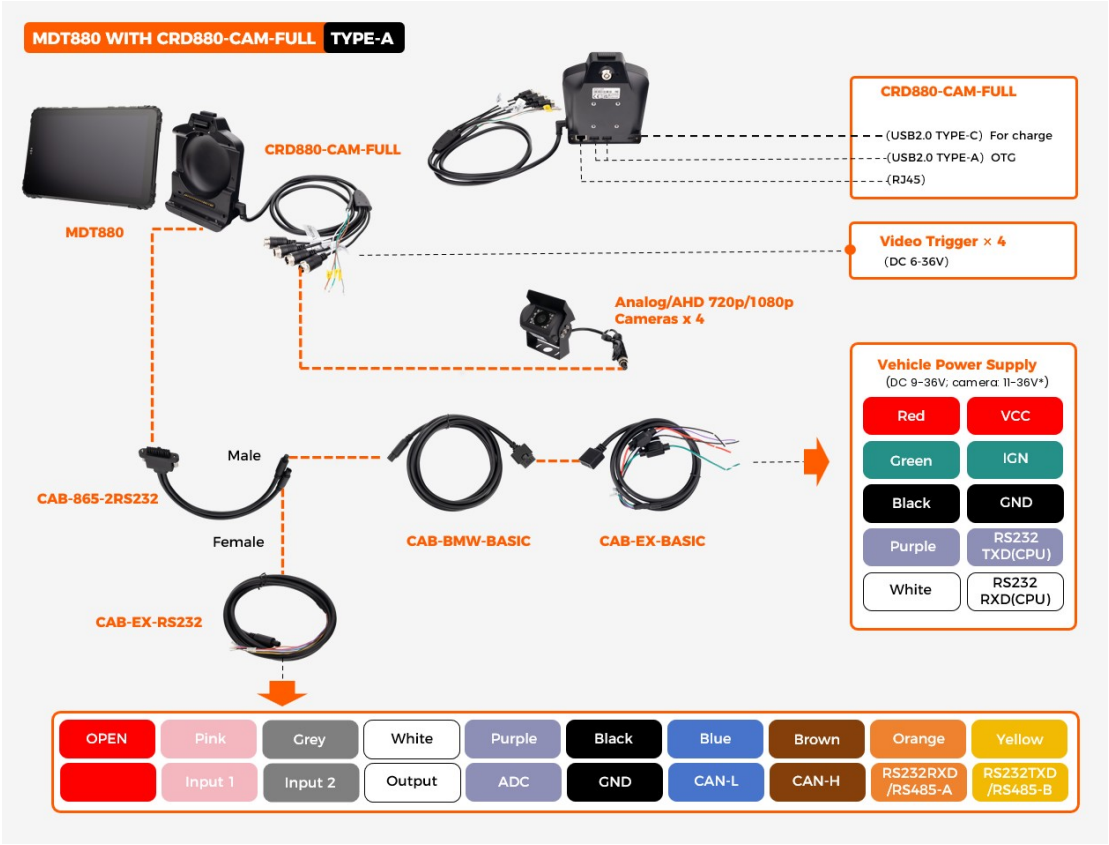

2.1.1.2 CRD880-CAM-FULL cradle with CAN features cable

TYPE-B: It provides 2x USB-A (OTG), 1x USB-C (Charging), 1x RJ45 (Ethernet), 1x RS232, 1x RS232/RS485 (RS232 by default), 5x GPIO (3x Input, 1x Output, 1x ADC), 2x CAN Bus, 4x Video Inputs (Camera), and 4x Video Triggers.

Topicon HK Limited
2314-2316, Tower C, Huangdu Plaza, Yitian Road, Futian District, Shenzhen 518048, China

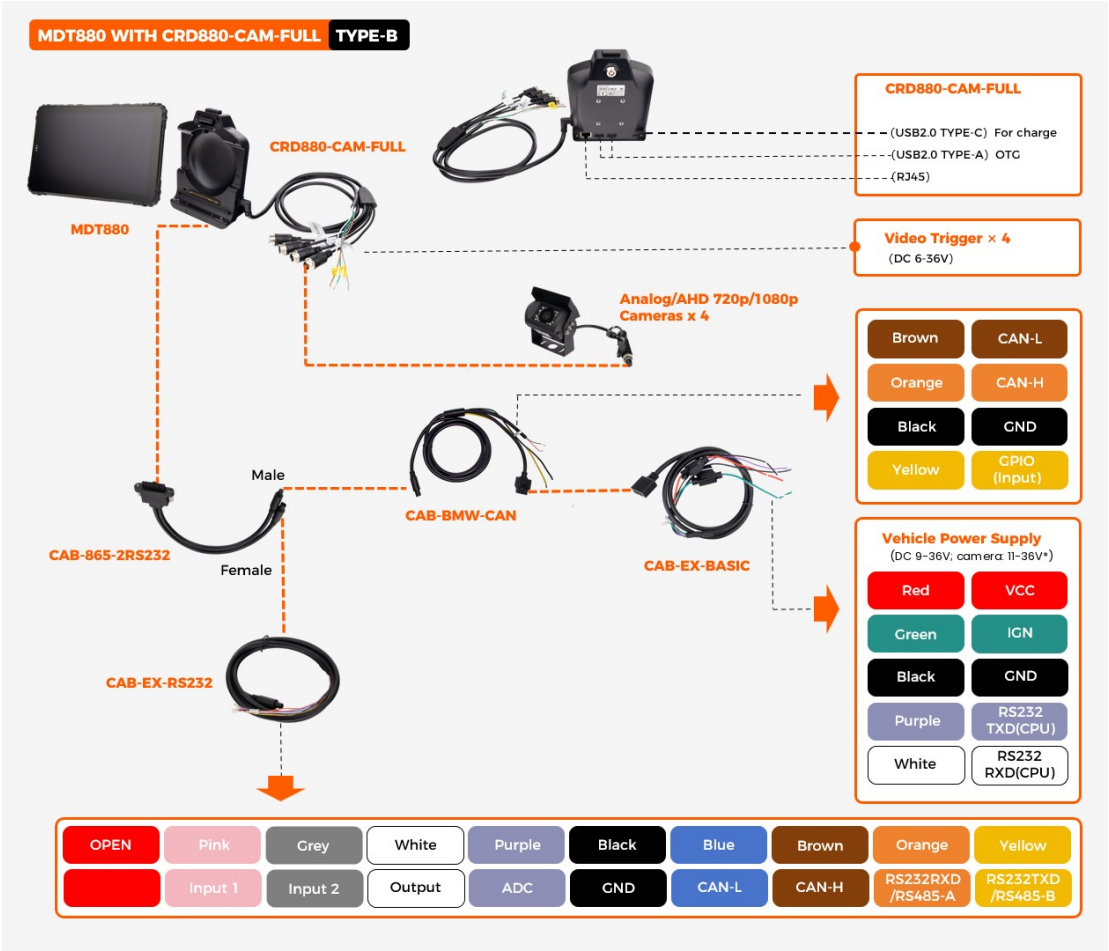

2.1.2 CRD880 Cradle

Full features cradle

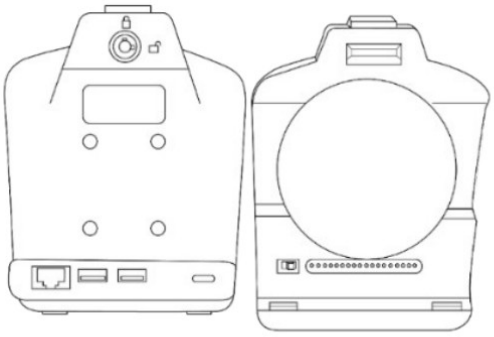

Basic features cradle

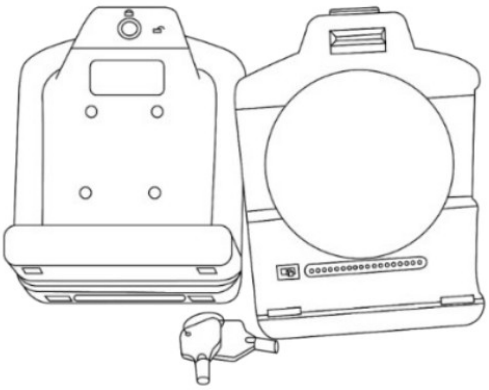

CRD880 Cradle/CRD880 Cradle

With RJ45, USB-A OTG (USB 2.0) USB-C (For charging only)

CRD865-BAS Cradle

Without RJ45, USB-A OTG and USB-C charge function

Topicon HK Limited
2314-2316, Tower C, Huangdu Plaza, Yitian Road, Futian District, Shenzhen 518048, China

2.1.2.1 CRD880 cradle with full features cable

It provides 2x USB-A (OTG), 1x USB-C (Charging), 1x RJ45 (Ethernet), 1x RS232, 1x RS232/RS485 (RS232 by default), and 4x GPIO.

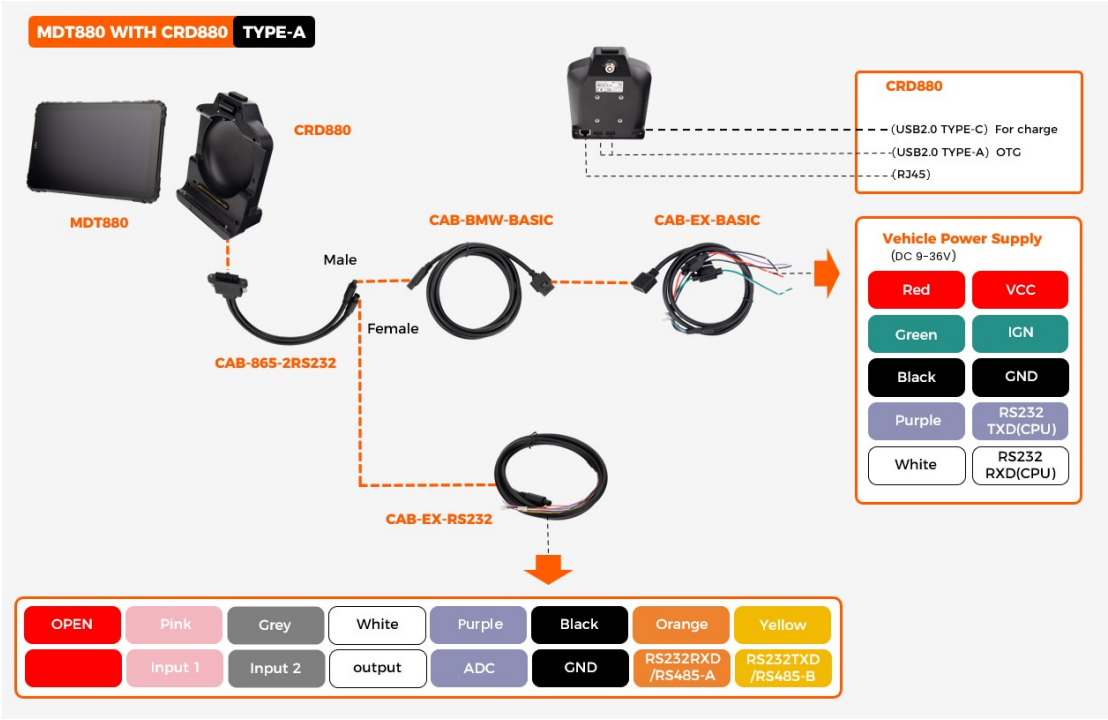

2.1.2.2 CRD880 cradle with basic features cable

It provides 1x RS232, 2x USB-A (OTG), 1x USB-C (Charging), 1x RJ45(Ethernet).

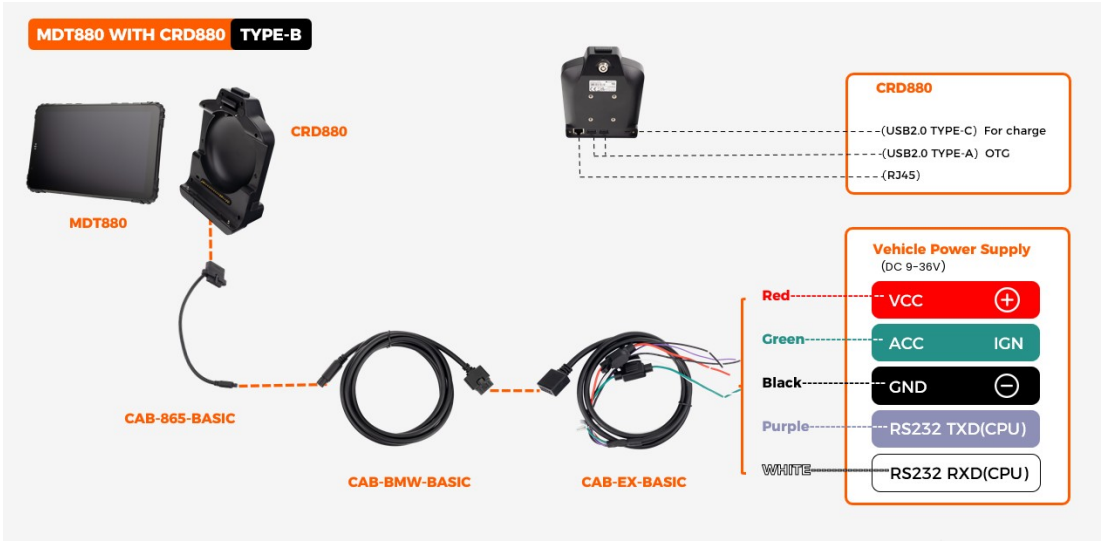

Topicon HK Limited
2314-2316, Tower C, Huangdu Plaza, Yitian Road, Futian District, Shenzhen 518048, China

2.1.3 CRD880-CAN Cradle

CRD880- CAN cradle with CAB-865-2RS232 cable

It provides 2x USB-A (OTG), 1x USB-C (Charging), 1x RJ45(Ethernet), 1x RS232,
1x RS232/RS485 (RS232 by default), 5x GPIO (3x Input, 1x Output, 1x ADC) and 2x CAN Bus.

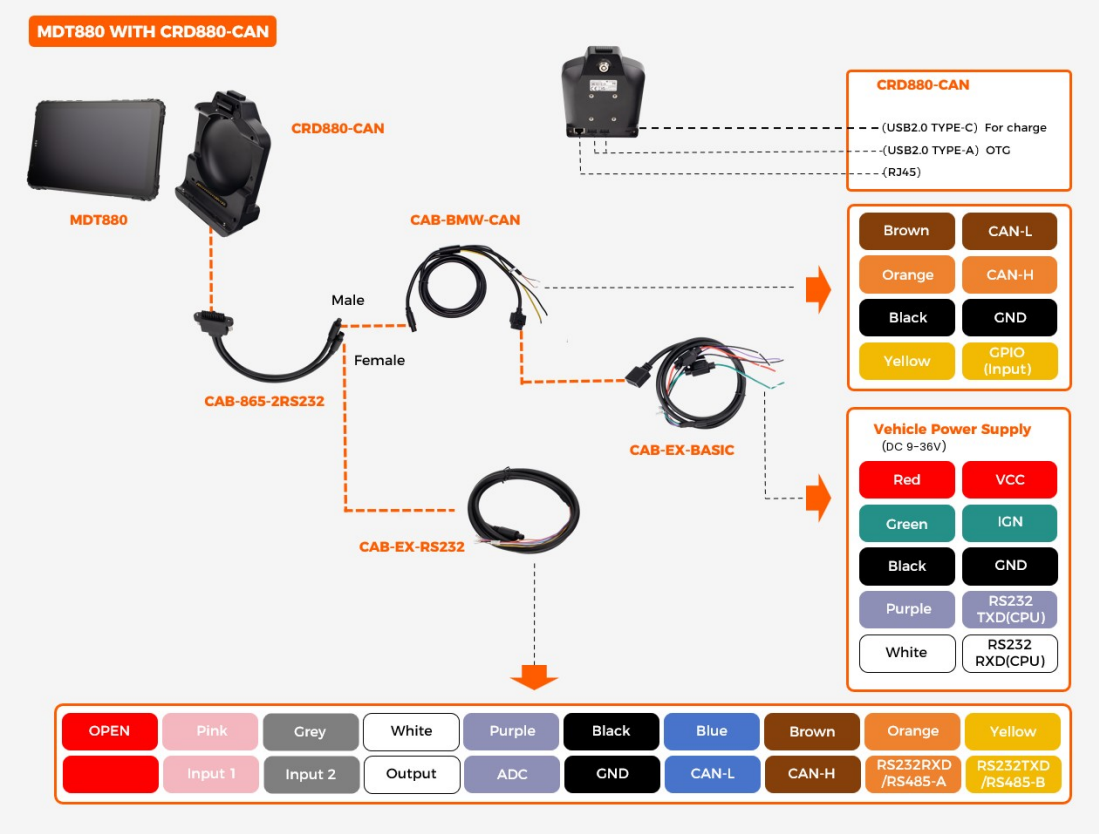

2.1.4 CRD880-M12 Cradle

2.1.4.1 CRD880-M12 cradle with full features cable

M12 connector for Ethernet
It provides 2x USB-A (OTG), 1x USB-C (Charging), 1x M12(Ethernet), 1x RS232,
1x RS232/RS485(RS232 by default) and 4x GPIO (2x Input, 1x Output, 1x ADC).

Topicon HK Limited
2314-2316, Tower C, Huangdu Plaza, Yitian Road, Futian District, Shenzhen 518048, China

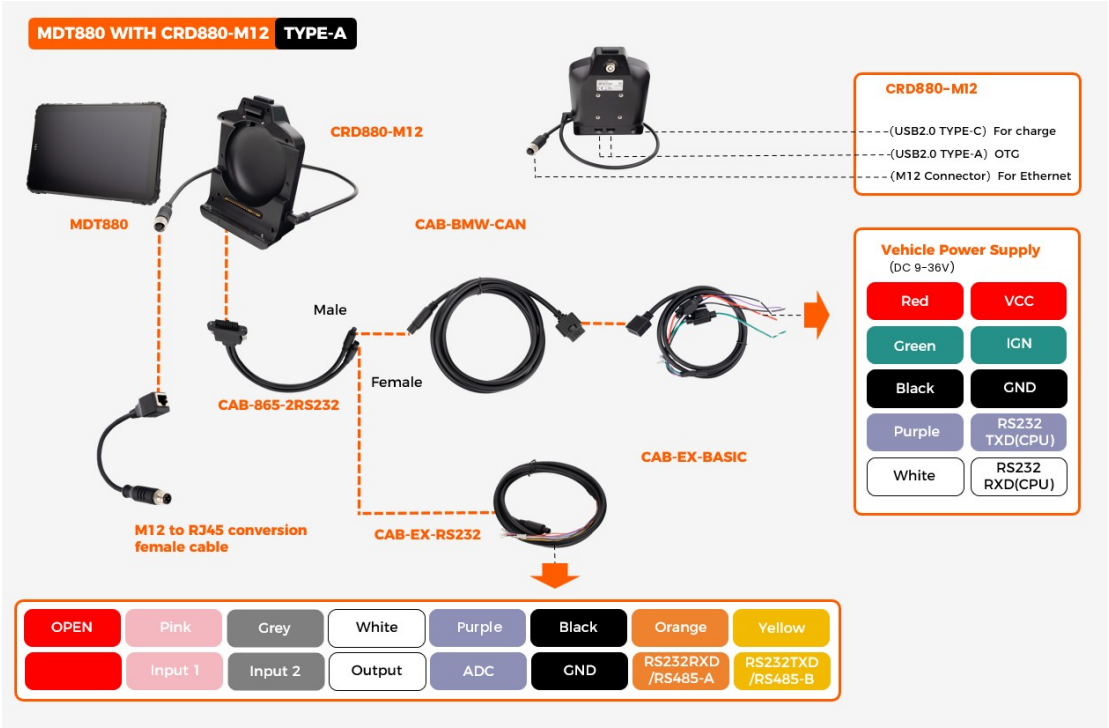

2.1.4.2 CRD880-M12 cradle with basic features cable

M12 connector for Ethernet

It provides 1x RS232, 2x USB-A (OTG), 1x USB-C (Charging), 1x M12(Ethernet).

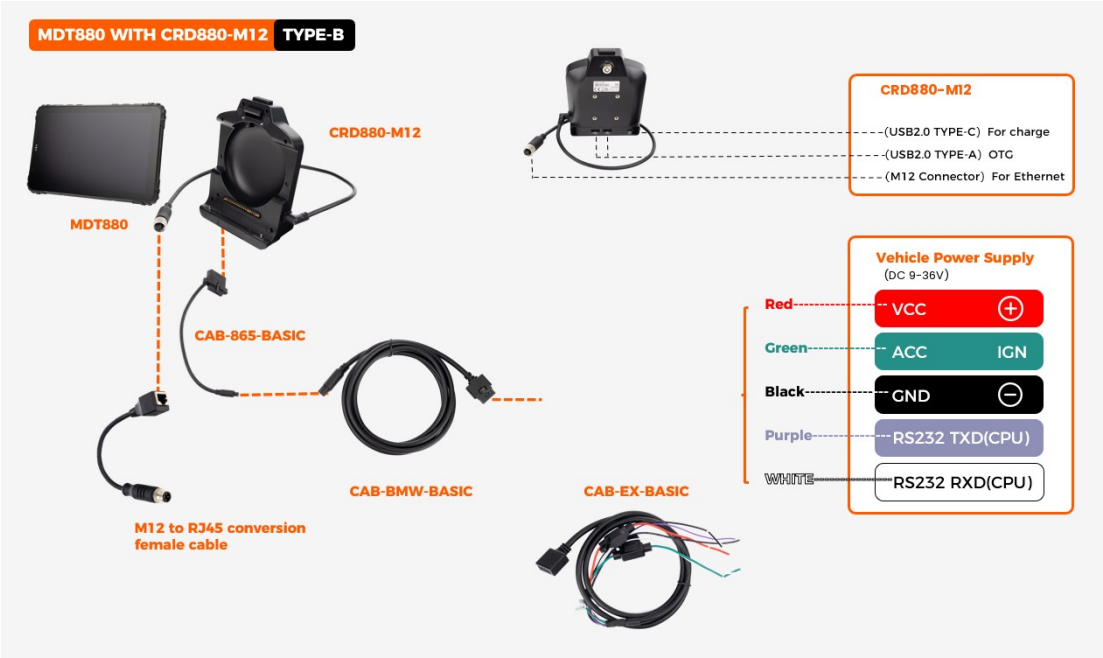

Topicon HK Limited
2314-2316, Tower C, Huangdu Plaza, Yitian Road, Futian District, Shenzhen 518048, China

2.1.5 CRD865-BAS Cradle

◆ **CAUTION: Single-channel video input and GPIO are not supported**

2.1.5.1 CRD865-BAS cradle with BMW basic cables

It provides 1x RS232(CPU).

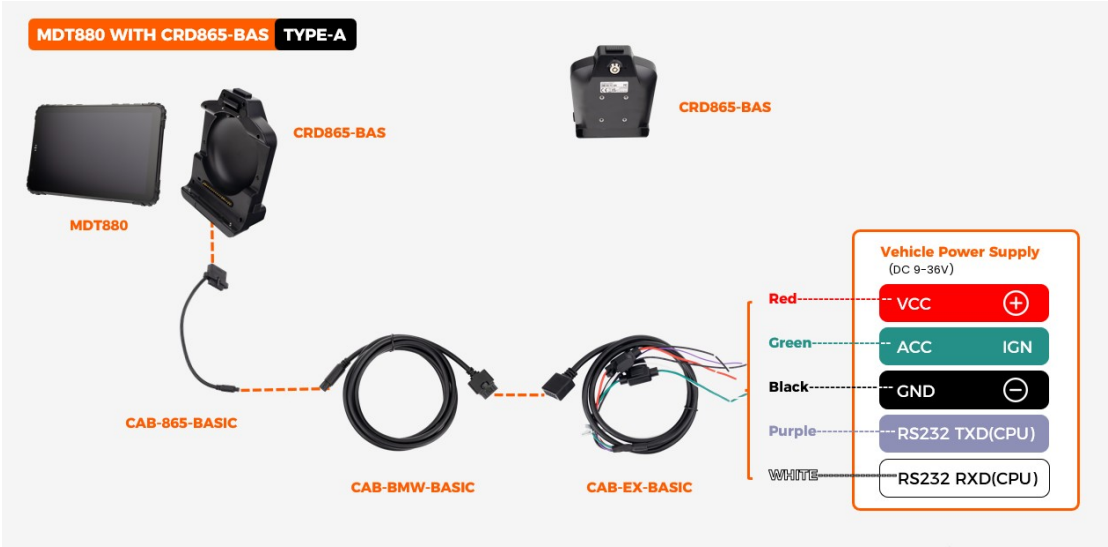

2.1.5.2 CRD865-BAS cradle with BMW-Connector Car Charger



Topicon HK Limited
2314-2316, Tower C, Huangdu Plaza, Yitian Road, Futian District, Shenzhen 518048, China

2.1.5.3 CRD865-FULL / CRD865-BAS cradle with USB-A OTG cables

It provides 1x RS232 and 1x USB-A OTG (USB 2.0).

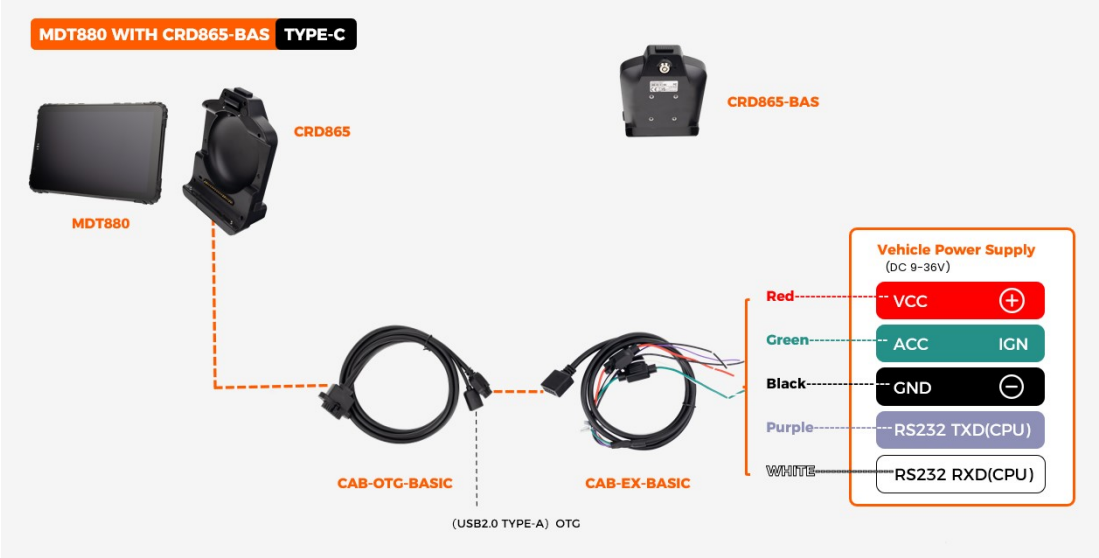

2.1.6 BKT865 Metal Bracket

2.1.6.1 BKT865-IP with waterproof cables

If you require waterproofing, you can use the BKT865-IP cradle.
It provides 1x RS232.

◆ **Note: without ignition control switch in the bracket.**

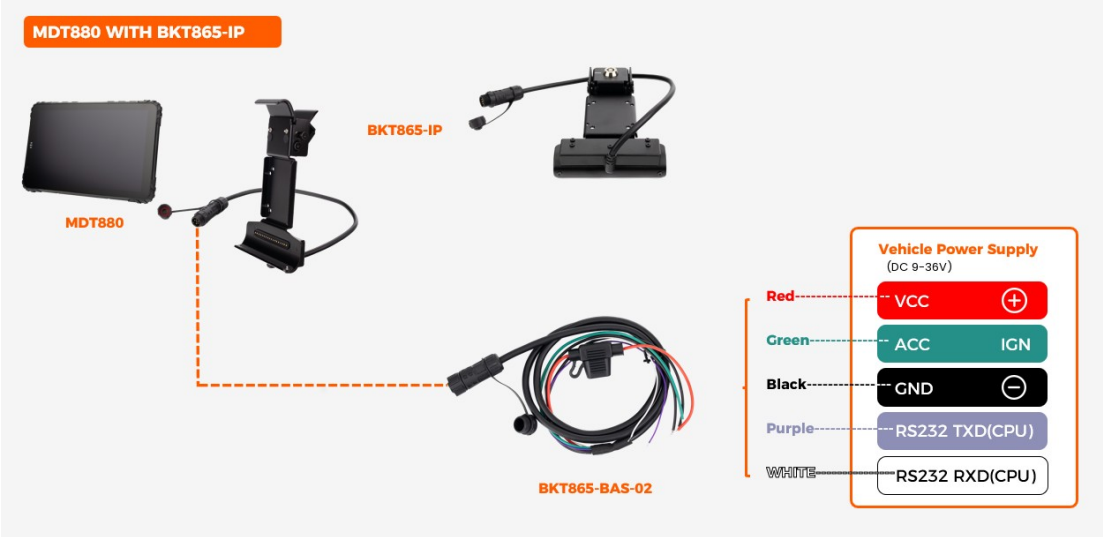

Topicon HK Limited
2314-2316, Tower C, Huangdu Plaza, Yitian Road, Futian District, Shenzhen 518048, China

2.1.6.2 BKT865-BMW with BMW basic cables

It provides 1x RS232.

◆ **Note: Without ignition control in the bracket.**



2.1.6.3 BKT865-OTG with USB-A OTG cable

It provides 1x RS232 and 1x USB-A OTG (USB 2.0)
It does not support video input.

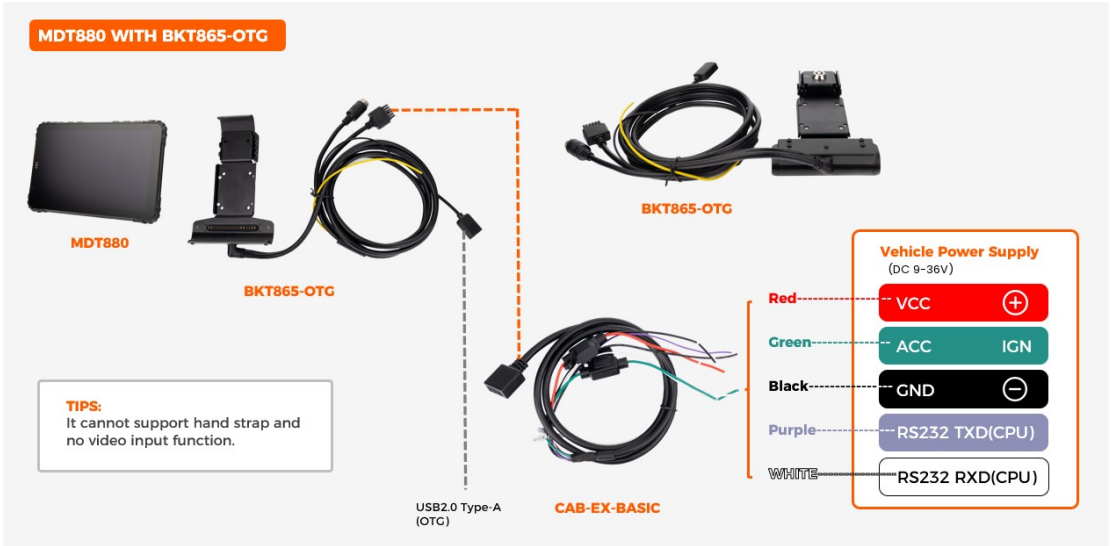

Topicon HK Limited
2314-2316, Tower C, Huangdu Plaza, Yitian Road, Futian District, Shenzhen 518048, China

2.1.7 BKT865-LAN Metal Bracket

◆ **NOTE: There is an ignition control switch inside the bracket.**

IGN switch: the IGN switch is switched to the right side, charging is independent of ignition ON/OFF.
If IGN switch is switched to the left side, charging is dependent of
ignition ON.

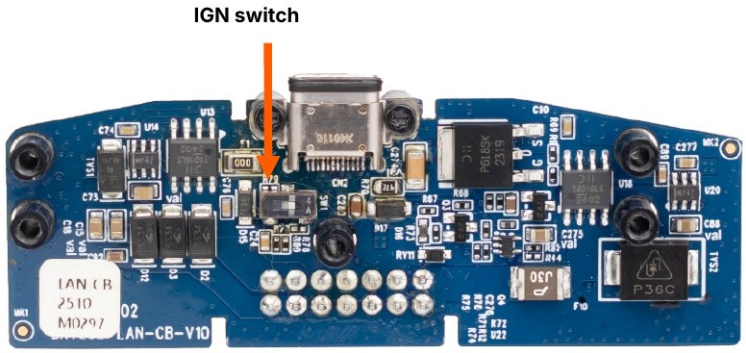

2.1.7.1 BKT865-LAN-01 with M12 cable

M12 connector for Ethernet
It provides 1x RS232(CPU).



Topicon HK Limited
2314-2316, Tower C, Huangdu Plaza, Yitian Road, Futian District, Shenzhen 518048, China

2.1.7.2 BKT865-LAN-02 with Barcode Scanner

There is a 1D/2D Barcode Scanner on the cradle.
M12 connector for Ethernet (**optional**)

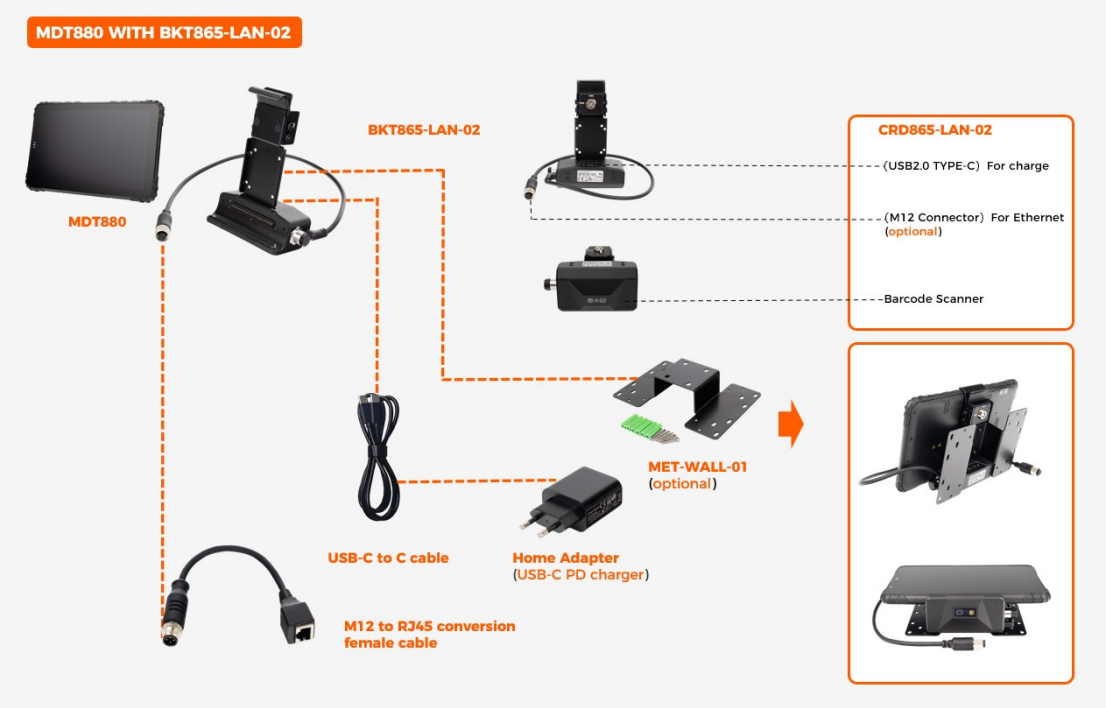

2.2 Cradle Cable Pin Assignment Overview

* Video input: input voltage 11-36 V, as the input must stay above 11 V to power the camera. All other input: 9-36 V.

Topicon HK Limited
2314-2316, Tower C, Huangdu Plaza, Yitian Road, Futian District, Shenzhen 518048, China

2.2.1 CAB-865-2RS232

Cradle cable with GPIO, RS232 and RS485 or CAN bus

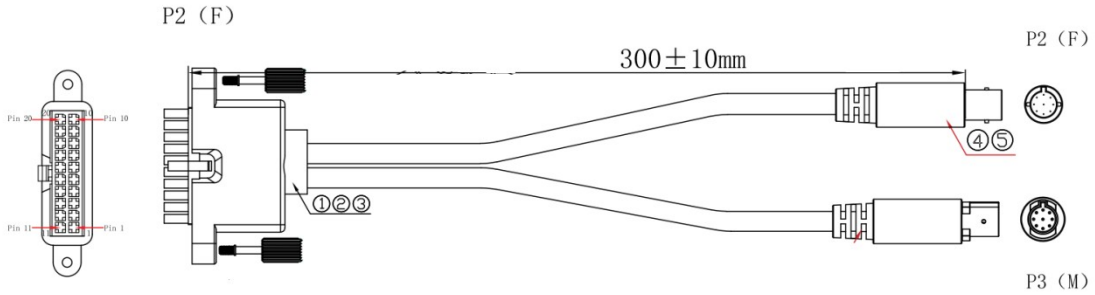

No	Item	Definition				
P1	20pin connector	**Connect to the CRD880 full feature cradle**				
P2	9pin BMW Connector (Female)	**Connect to the extension cable (CAB-BMW-BASIC + CAB-EX-BASIC)**				
		Pin 1	Pin 2	Pin 3	Pin 4	Pin 5
		VCC 9-36V input*	IGN	Video Trigger	Video input	RXD (CPU)
		Pin 6	Pin 7	Pin 8	Pin 9	
		TXD (CPU)	Shield	GND	Camera DC12V output	
P3	9pin BMW Connector (Male)	**Connect to the GPIO/RS232/RS485 cable (CAB-EX-RS232)**				
		Pin 1	Pin 2	Pin 3	Pin 4	Pin 5
		GPIO-1 (Input 1)	GPIO-3 (Output)	RS485-A / CAN-L	RXD(USB)	GND
		Pin 6	Pin 7	Pin 8	Pin 9	
		GPIO-2 (Input 2)	GPIO-4 (ADC)	RS485-B / CAN-H	TXD(USB)	

Topicon HK Limited
2314-2316, Tower C, Huangdu Plaza, Yitian Road, Futian District, Shenzhen 518048, China

2.2.2 CAB-EX-RS232

GPIO, RS232 and RS485 or CAN bus

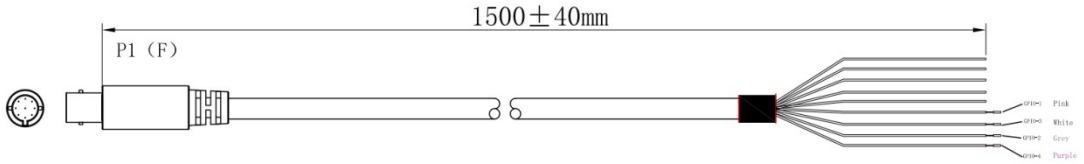

No	Item	Definition				
P1	9pin BMW Connector (Female)	Connect to your GPIO/RS232/RS485 devices				
		Pink	White	Blue	Orange	Black
		GPIO-1 (Input 1)	GPIO-3 (Output)	RS485-A / CAN-L	RXD(USB)	GND
		Grey	Purple	Brown	Yellow	
		GPIO-2 (Input 2)	GPIO-4 (ADC)	RS485-B / CAN-H	TXD(USB)	

Topicon HK Limited
2314-2316, Tower C, Huangdu Plaza, Yitian Road, Futian District, Shenzhen 518048, China

2.2.3 CAB-HUB-BASIC

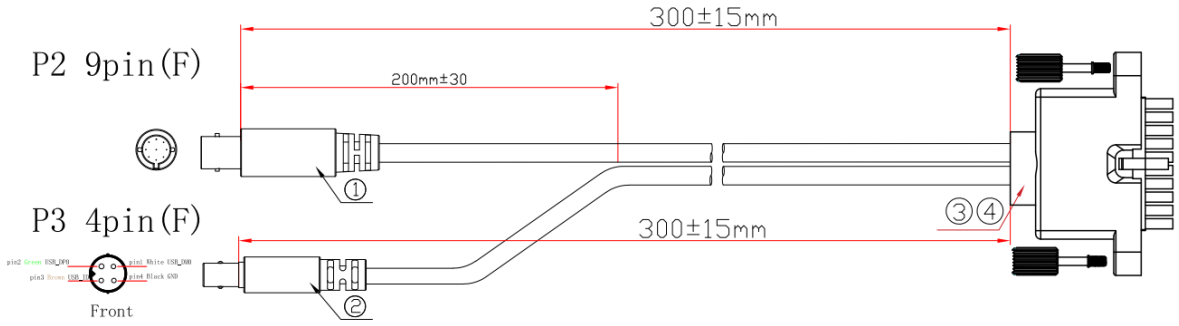

No	Item	Definition				
P1	20pin connector	Connect to the CRD865 full feature cradle				
P2	9pin BMW Connector (Female)	Connect to the extension cable (CAB-BMW-BASIC + CAB-EX-BASIC)				
		Pin 1	Pin 2	Pin 3	Pin 4	Pin 5
		VCC 9-36V input*	IGN	Video Trigger	Video input	RXD (CPU)
		Pin 6	Pin 7	Pin 8	Pin 9	
		TXD (CPU)	Shield	GND	Camera DC12V output	
P3	4pin BMW Connector (Female)	Connect to the camera hub extension cable (CAB-EX-HUB)				
		Pin 1	Pin 2	Pin 3	Pin 4	
		D-	D+	Detect USB-ID	GND	

2.2.4 CAB-BMW-BASIC

Basic features Cradle cable

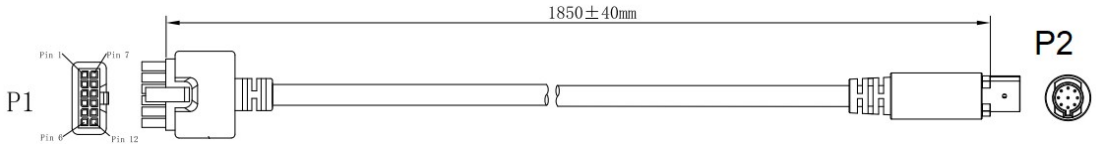

No	Item	Definition						
P1	Power Connector	Pin 2	Pin 3	Pin 6	Pin 9	Pin 10	Pin 11	
		GND	RXD	IGN	Shield	TXD	VCC 9-36V input	
P2	9 pin BMW Connector M	Pin 1		Pin 2	Pin 5	Pin 6	Pin 7	Pin 8
		VCC 9-36V input		IGN	RXD	TXD	Shield	GND

Topicon HK Limited
2314-2316, Tower C, Huangdu Plaza, Yitian Road, Futian District, Shenzhen 518048, China

2.2.5 CAB-BMW-CAN

Cradle cable with GPIO and CAN bus

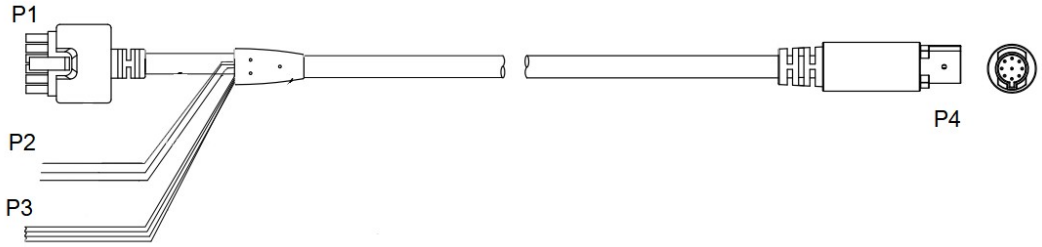

No	Item	Definition					
P1	**Power Connector**	Pin 2	Pin 3	Pin 6	Pin 9	Pin 10	Pin 11
		GND	RXD	IGN	Shield	TXD	VCC 9-36V input
P2	**Wires**	Brown		Black	Orange		
		CAN-L		GND	CAN-H		
P3	**Wires**	Black	Yellow				
		GND	GPIO input				
P4	**9 pin BMW Connector M**	Pin 1		Pin 2	Pin 3		Pin 4
		VCC 9-36V input		IGN	GPIO input		CAN-L
		Pin 5	Pin 6	Pin 7	Pin 8	Pin 9	
		RXD	TXD	Shield	GND	CAN-H	

Topicon HK Limited
2314-2316, Tower C, Huangdu Plaza, Yitian Road, Futian District, Shenzhen 518048, China

2.2.6 CAB-MB-FULL

Full features Cradle cable

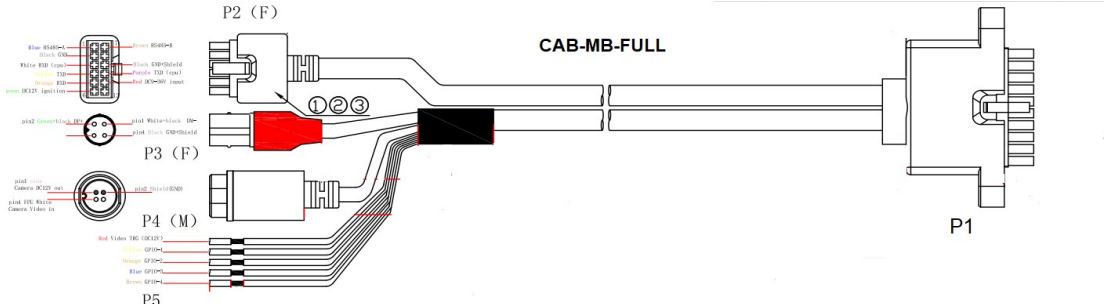

<table>
<tr><th>No</th><th>Item</th><th colspan="5">Definition</th></tr>
<tr><td>P1</td><td>20pin Micro-Fit connector</td><td colspan="5">Connect to the full feature cradle</td></tr>
<tr><td rowspan="3">P2</td><td rowspan="3">12pin Micro-Fit connector</td><td colspan="5">Connect to the extension cable (CAB-EX-FULL)</td></tr>
<tr><td>Pin 1</td><td>Pin 2</td><td>Pin 3</td><td>Pin 4</td><td>Pin 5</td></tr>
<tr><td>RS485-A</td><td>GND</td><td>RS232 RXD (CPU)</td><td>RS232 TXD (USB)</td><td>RS232 RXD (USB)</td></tr>
<tr><td></td><td></td><td>Pin 6</td><td>Pin 7</td><td>Pin 9</td><td>Pin 10</td><td>Pin 11</td></tr>
<tr><td></td><td></td><td>IGN</td><td>RS485-B</td><td>GND</td><td>RS232 TXD (CPU)</td><td>VCC 9-36V input*</td></tr>
<tr><td rowspan="3">P3</td><td rowspan="3">4pin BMW Connector F</td><td colspan="5">Connect to the 4pin BMW connector on the camera hub cable (CAB-EX-HUB)</td></tr>
<tr><td colspan="2">Pin 1</td><td>Pin 2</td><td colspan="2">Pin 4</td></tr>
<tr><td colspan="2">DM-</td><td>DP+</td><td colspan="2">GND</td></tr>
<tr><td rowspan="3">P4</td><td rowspan="3">4 pin Circular Connector M (Not applicable to MDT880)</td><td colspan="5">Connect to the camera (Support Analog, AHD 720P, AHD 1080P camera)</td></tr>
<tr><td colspan="2">Pin 1</td><td>Pin 2</td><td colspan="2">Pin 4</td></tr>
<tr><td colspan="2">DC12V output</td><td>GND</td><td colspan="2">Camera video input</td></tr>
<tr><td rowspan="3">P5</td><td rowspan="3">GPIO Wires</td><td>GPIO-1 (Yellow)</td><td>GPIO-2 (Orange)</td><td>GPIO-3 (Blue)</td><td>GPIO-4 (Brown)</td><td>Red wire</td></tr>
<tr><td>Input 1</td><td>Input 2</td><td>output</td><td>ADC</td><td>Video Trigger</td></tr>
<tr><td colspan="2">Input 3-36V=High
Input 0-2V=Low</td><td>Output the voltage from the Tablet. 200mA current.</td><td>Analog Digital Converter. Read the Input voltage.</td><td></td></tr>
</table>

Topicon HK Limited
2314-2316, Tower C, Huangdu Plaza, Yitian Road, Futian District, Shenzhen 518048, China

2.2.7 CAB-EX-FULL

Cradle extension cable

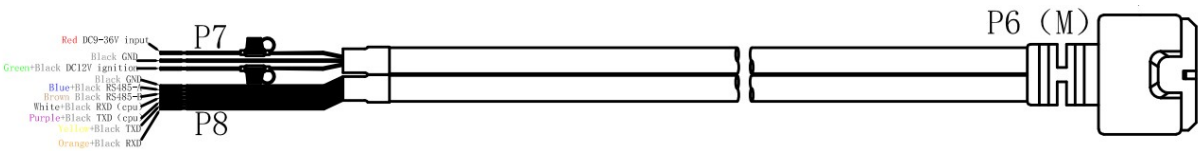

No	Item	Definition						
P6	12pin Micro-Fit connector	Connect to the P2 connector on the cradle cable (CAB-MB-FULL)						
P7	Power Supply wires	Connect to the vehicle's battery.						
		Red		Green		Black		
		VCC9-36V input		IGN		GND		
P8	Serial port wires	1 x RS485, 2 x RS232 (White/Purple RS232 same as old model MDT865/MDT1065 serial port)						
		Blue	Brown	Yellow	Orange	White	Purple	Black
		RS485-A	RS485-B	TXD(USB)	RXD(USB)	RXD(CPU)	TXD(CPU)	GND

Topicon HK Limited
2314-2316, Tower C, Huangdu Plaza, Yitian Road, Futian District, Shenzhen 518048, China

2.2.8 CAB-EX-HUB

Camera hub cable

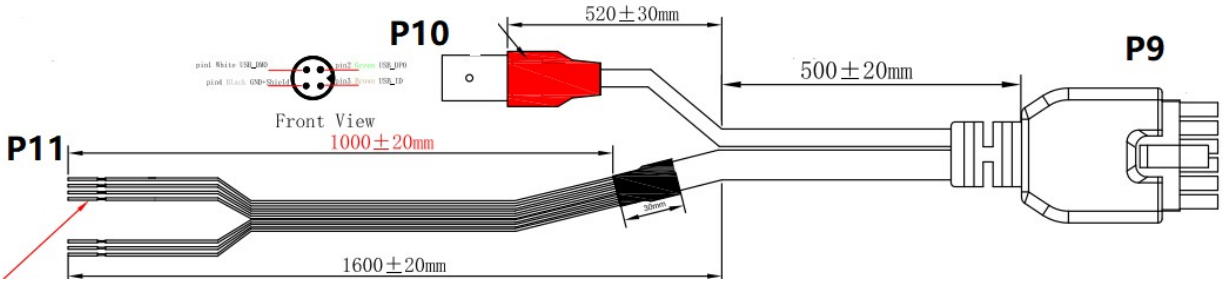

No	Item	Definition						
P9	12pin Micro-Fit connector	Connect to the Camera Hub HH420/HH421.						
P10	4pin BMW Connector M	Connect to the 4pin BMW connector on the full feature cradle cable (CAB-MB-FULL).						
		Pin 1	Pin 2	Pin 3	Pin 4			
		DM-	DP+	ID	GND			
P11	Trigger wires	4 channels trigger for camera.						
		Pink	Blue	Purple	Orange	Black	Yellow	Red
		CVBS_DET1	CVBS_DET2	CVBS_DET3	CVBS_DET4	GND	IGN	VCC 9-36V input*

Topicon HK Limited
2314-2316, Tower C, Huangdu Plaza, Yitian Road, Futian District, Shenzhen 518048, China

2.2.9 CAB-OTG-BASIC

Basic features Cradle cable

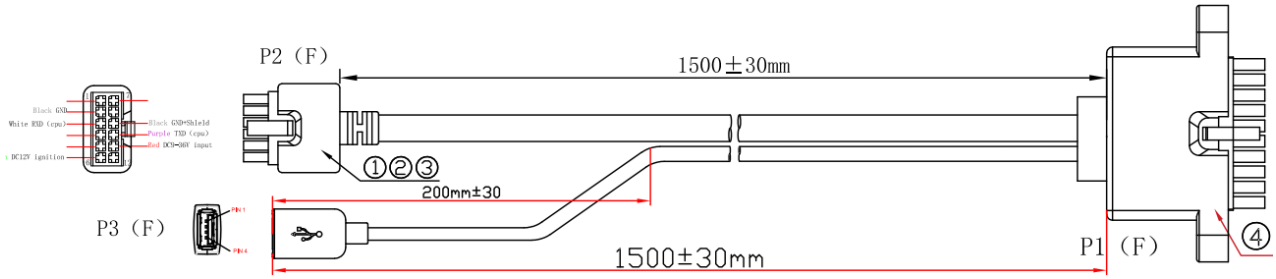

No	Item	Definition							
P1	Cradle Connector	Pin 3	Pin 8	Pin 9	Pin 10	Pin 13	Pin 18	Pin 19	Pin 20
		IGN	RXD	GND	D+	VCC 9-36V input	TXD	VBUS 5V	D-
P2	Power Connector	Pin 2	Pin 3	Pin 6	Pin 9	Pin 10	Pin 11		
		GND	RXD	IGN	GND	TXD	VCC 9-36V input		
P3	USB	USB-A (cannot be used simultaneously with USB-C on the device)							

2.2.10 CAB-EX-BASIC

Basic features Cradle extension cable

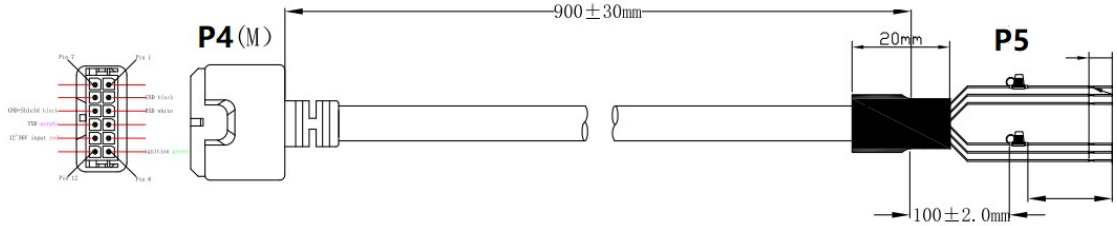

No	Item	Definition				
P4	12pin Micro-Fit connector	Connect to the basic features cradle cable P2 connector.				
P5	Power Supply and Serial port wires	It can be connected to the vehicle's battery.				
		Red	Green	Black	White	Purple
		VCC 9-36V input	IGN	GND	RXD	TXD

◆ **Note: These two basic feature cables can also be used for a full features cradle.**

Topicon HK Limited
2314-2316, Tower C, Huangdu Plaza, Yitian Road, Futian District, Shenzhen 518048, China

2.2.11 CAB-865-BASIC

L-Shape cradle cable

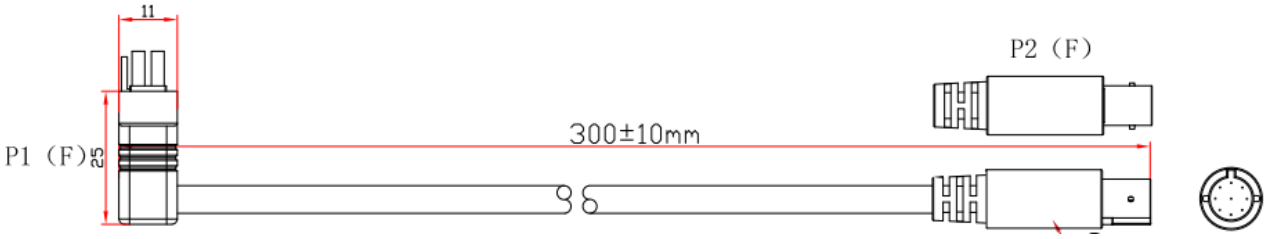

No	Item	Definition					
P1	Cradle Connector	Pin 1	Pin 2	Pin 3	Pin 8	Pin 9	Pin 11
		Shield	Video Trigger	IGN	RXD	GND	Video input
		Pin 12		Pin 13	Pin 18		
		Camera DC12V output		VCC 9-36V input*	TXD		
P2	9 pin BMW Connector F	Pin 1		Pin 2	Pin 3		Pin 4
		VCC 9-36V input*		IGN	Video Trigger		Video input
		Pin 5	Pin 6	Pin 7	Pin 8	Pin 9	
		RXD	TXD	Shield	GND	Camera DC12V output	

Topicon HK Limited
2314-2316, Tower C, Huangdu Plaza, Yitian Road, Futian District, Shenzhen 518048, China

2.2.12 CAB-EX-2M/ CAB-EX-5M

Molex to Molex 2meter and 5meter extension cables

CAB-EX-2M

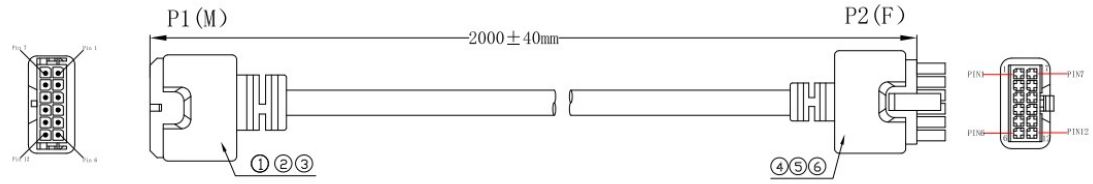

CAB-EX-5M

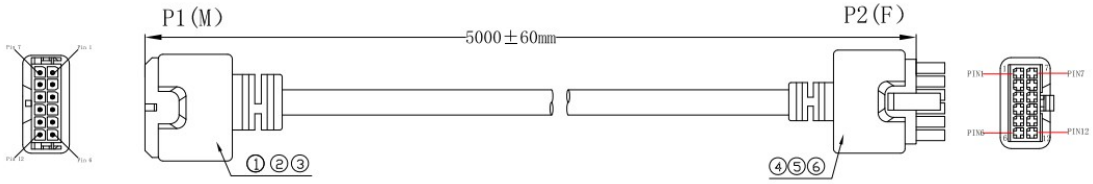

No	Item	Definition							
P1	12pin Molex Male	Pin 2	Pin 3	Pin 4	Pin 5	Pin 6	Pin 9	Pin 10	Pin 11
		GND	RXD (CPU)	TXD (USB)	RXD (USB)	ACC IGN	Shield	TXD (CPU)	VCC DC9-36V input
P2	12pin Molex Female	Pin 2	Pin 3	Pin 4	Pin 5	Pin 6	Pin 9	Pin 10	Pin 11
		GND	RXD (CPU)	TXD (USB)	RXD (USB)	ACC IGN	Shield	TXD (CPU)	VCC DC9-36V input

Topicon HK Limited
2314-2316, Tower C, Huangdu Plaza, Yitian Road, Futian District, Shenzhen 518048, China

2.2.13 BKT865-BAS-01

Basic feature cable with waterproof connector

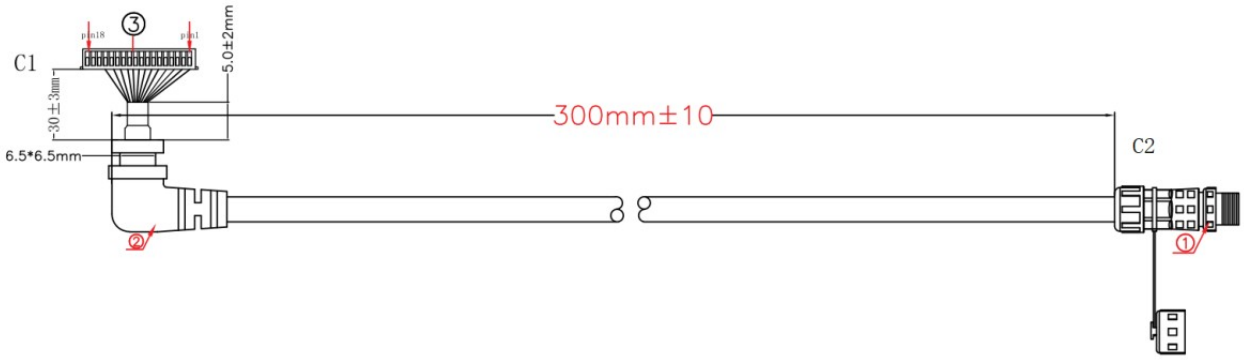

No	Item	Definition					
C1	Housing 18pin	Pin 6	Pin 7	Pin 10	Pin 12	Pin 17	Pin 18
		TXD	RXD	IGN	VCC input 9-36V	GND	GND
C2	6pin Waterproof Connector M	Pin 1	Pin 2	Pin 3	Pin 4	Pin 5	Pin 6
		GND	TXD	GND	RXD	IGN	VCC

Topicon HK Limited
2314-2316, Tower C, Huangdu Plaza, Yitian Road, Futian District, Shenzhen 518048, China

2.2.14 BKT865-BAS-02

Basic feature cable with waterproof connector for MDT880

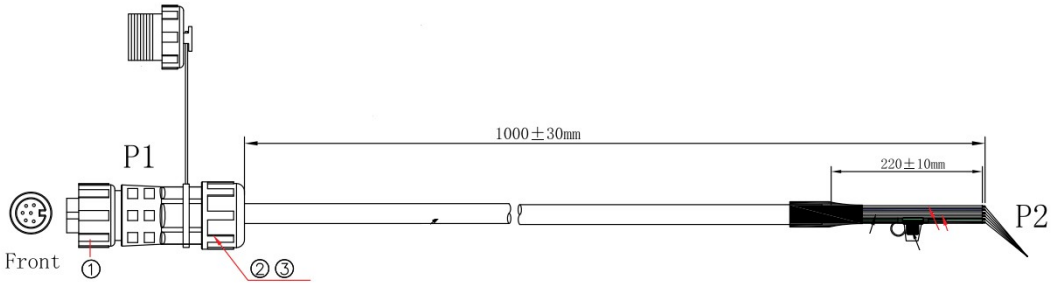

No	Item	Definition					
P1	6pin Waterproof Connector F	Pin 1	Pin 2	Pin 3	Pin 4	Pin 5	Pin 6
		GND	TXD	GND	RXD	IGN	VCC
P2	Wires	Black	Purple	Black	White	Green	Red
		GND	TXD	GND	RXD	IGN	VCC

2.2.15 BKT865-BAS-BMW

BMW cable for MDT865

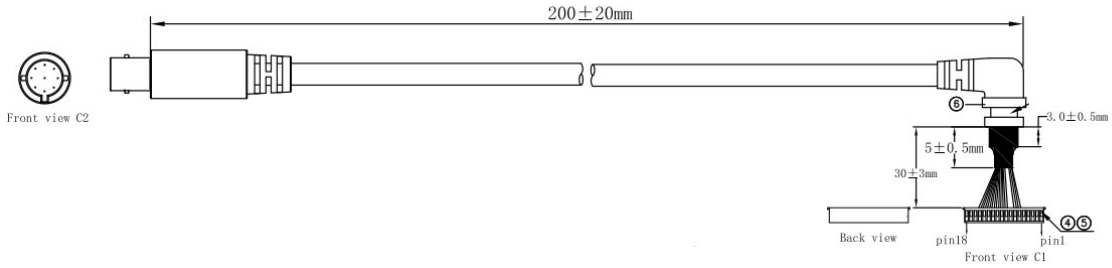

No	Item	Definition			
C1	Housing 18pin	Pin 7	Pin 9	Pin 10	Pin 11
		VCC input 9-36V*	IGN	Camera TRG	Camera input
		Pin 12	Pin 13	Pin 14	Pin 15
		RXD	TXD	Shield	GND
C2	BMW Connector M	Pin 1	Pin 2	Pin 3	Pin 4
		VCC input 9-36V*	IGN	Camera TRG	Camera input
		Pin 5	Pin 6	Pin 7	Pin 8
		RXD	TXD	Shield	GND

Topicon HK Limited
2314-2316, Tower C, Huangdu Plaza, Yitian Road, Futian District, Shenzhen 518048, China

2.2.16 CAB-EX-DB9

Basic cradle extension cable with DB9 connector

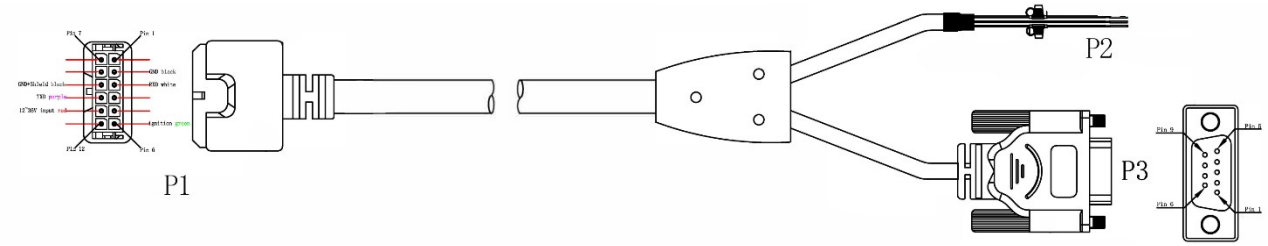

No	Item	Definition					
P1	Cradle Connector	Pin 2	Pin 3	Pin 6	Pin 9	Pin 10	Pin 11
		GND	RXD	IGN	GND+Shield	TXD	VCC 9-36V input
P2	Power Connector	Pin 6		Pin 9		Pin 11	
		IGN		GND+Shield		VCC 9-36V input	
P3	DB9	Pin 2		Pin 3		Pin 5	
		TXD		RXD		GND	

Topicon HK Limited
2314-2316, Tower C, Huangdu Plaza, Yitian Road, Futian District, Shenzhen 518048, China

2.3 Accessories

2.3.1 Cradles



CRD880-CAM

Full feature cradle (with max 4 video input)



CRD880

Full feature cradle (Ethernet, OTGx2)



CRD880-CAN

Full feature cradle with CAN bus (Ethernet, OTGx2)



CRD880-M12

Full feature cradle (Ethernet with M12 cable, OTGx2)



CRD865-BAS

Basic feature cradle

Topicon HK Limited
2314-2316, Tower C, Huangdu Plaza, Yitian Road, Futian District, Shenzhen 518048, China



BKT865-BMW

Metal bracket with BMW connector



BKT865-IP

Metal bracket with waterproof connector



BKT865-LAN-01

Metal bracket with M12 cable (for Ethernet) and another M12 connector (for Vcc, IGN, GND and RS232)



BKT865-LAN-02

Metal bracket with 1D/2D barcode at the bottom

These two metal brackets support vehicle charging only (9–36 V DC), IGN, GND, and 1× RS232.

2.3.2 Expansion Modules

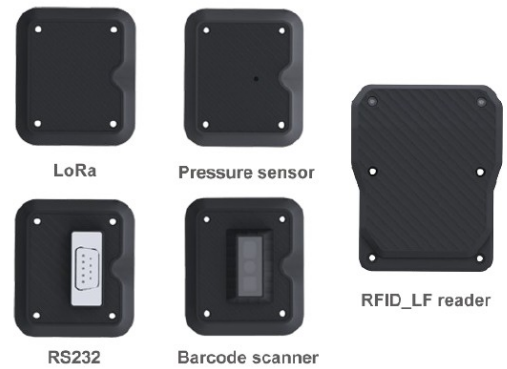



(SE4107 barcode module)

- **LoRa Module:**
  MOD-LORA-02 (LoRa-E220)
  (Frequency Range: 850.125-930.125MHz)
  Support multiple transmission methods

  MOD-LORA-01
  (For temperature sensor)
- **Pressure sensor:** MOD-PRE-01
  (Air pressure sensor)
- **RS232 module:** MOD-RS232-01
- **RFID LF Reader:** MOD-LF-01
  (support 125kHz/134.2kHz)

Topicon HK Limited
2314-2316, Tower C, Huangdu Plaza, Yitian Road, Futian District, Shenzhen 518048, China

2.3.3 Chargers



ADA-HOME-01
(PD quick charge home adapter)



ADA-CAR-01
Car charger



CAR-865-BMW



ADA-HOME-02
(Quick charge home adapter with optional plug)



with US plug



with AU plug



with EU plug



with UK plug

2.3.4 Other Accessories



RAM-ROUND-2
(2 x round plate, 6cm arm)



RAM-ROUND-3
(2 x round plate, 9cm arm)



RAM-SUC-01
(1 x round plate, 6cm arm, suction cup)



MET-WALL-00
Wall mount plate

Topicon HK Limited
2314-2316, Tower C, Huangdu Plaza, Yitian Road, Futian District, Shenzhen 518048, China



EXT-GPS-01
External GPS antenna (with L-shape cable)



EXT-GPS-02
Conversion cable (MMCX to SMA female)



CAP-865-01
Sunshield Cap
lock to tablet and block the sunlight



CASE-865-01
Ultra protection case (not compatible with sunshield and module)



STR-HAND-01
Hand Strap



MET-BOT-01
Bottom metal plate



SCR-865-GL
7H glass screen protector (glare)



STY-865-01
Stylus pen with holder



ACC-WALKIE-01
Walkie talkie



SCREW-01
Screw driver for SIM card cover



BAG-01
Carry bags



BAG-02



EXT-GPS-03
USB GPS receiver



EXT-USB-CAN-01
USB to CAN bus adapter

Topicon HK Limited
2314-2316, Tower C, Huangdu Plaza, Yitian Road, Futian District, Shenzhen 518048, China

Chapter 3: Getting Started

3.1 Power On/Off and Sleep/Wake

This chapter describes how to power on and off the device, put the device into sleep mode (screen saver) and force restart. Proper operation of power on/off the device will be beneficial to ensure the stability of the system. The device status indicated by the color of the indicator is as described in the following table for the standard.

Table 2.1.1 Indicator color and device status table

LEDs Behavior	Device Status
Red light on	Charging
Green light on	Fully charged
Light off	High temperature causes stop charging.
Red light on	High temperature causes shutdown.
Red or Green light blinking	Notification (Sleep when charging)

1. Power on the Device

a. Power on by pressing the power button: Press and hold the power button for more than 2 seconds until the boot screen appears. It needs around 20 seconds to start the system.
b. Power consumption during operation: 15W (typical).

2. Power off the Device

a. Power off by pressing the button: In the status of working on the device desktop, long press the power button for more than 2 seconds until the shutdown prompt pop-up then click the “Power off” option.
b. Power consumption when powered off (docked): approx. 250 mW.

3. Sleep and Wake the Device

a. Auto sleep, the sleep time can be set up in the settings.
b. Short press button to sleep.
c. Short press to wake.
d. Wake up by ignition ON.

4. Restart the device

Restart by pressing the button: In the status of working on the device desktop, long press the power button for more than 2 seconds until the prompt pop-up then click the “Restart” option.

Topicon HK Limited
2314-2316, Tower C, Huangdu Plaza, Yitian Road, Futian District, Shenzhen 518048, China

3.2 Installing Micro SD Card and SIM Card

Install the microSD card and nano-SIM card as follows.

- Find the Nano-SIM card slot and the Micro SD card slot. The following illustration shows the correct card orientation.
- To make removal easier, attach a small piece of tape to each card as shown in Figure.
- Secure the card slot cover with the screws to prevent loss or theft.

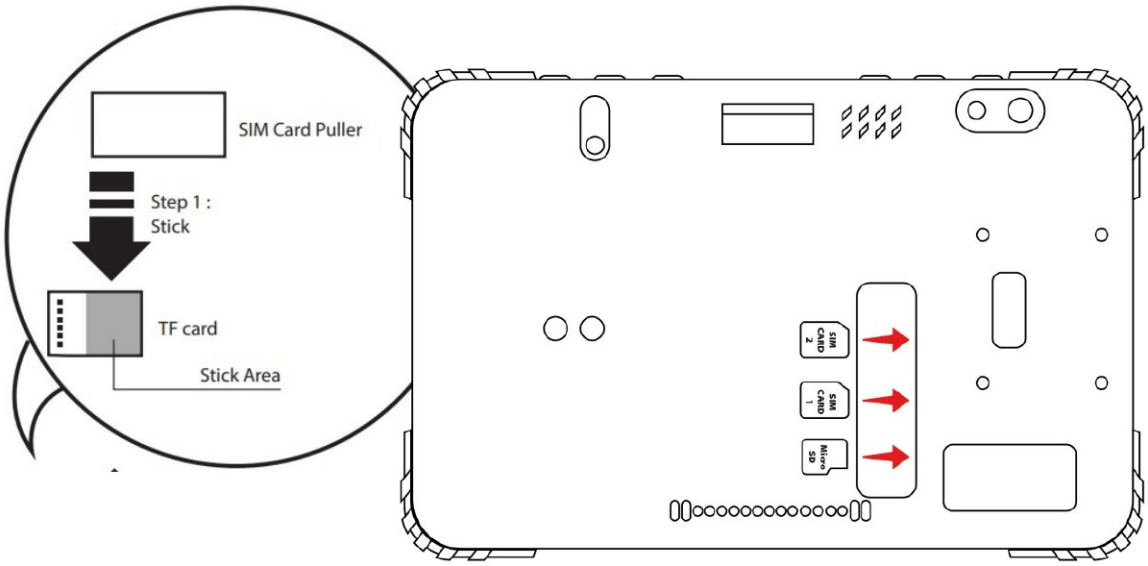

3.3 Charging the Battery

The battery is built-in and cannot be removed by the user.
The battery is partially discharged during transport. Be sure to charge the battery to full when you are charging it for the first time.

◆ **NOTE: In order to ensure the life and performance of the battery, if your tablet has been stored in the warehouse for more than three months, it is recommended to charge the battery every three months.**

Topicon HK Limited
2314-2316, Tower C, Huangdu Plaza, Yitian Road, Futian District, Shenzhen 518048, China

3.4 Charging via Vehicle Power Supply

To charge the battery with the vehicle power supply:

a) Place the device on the optional cradle, then connect the cradle to the vehicle power supply.

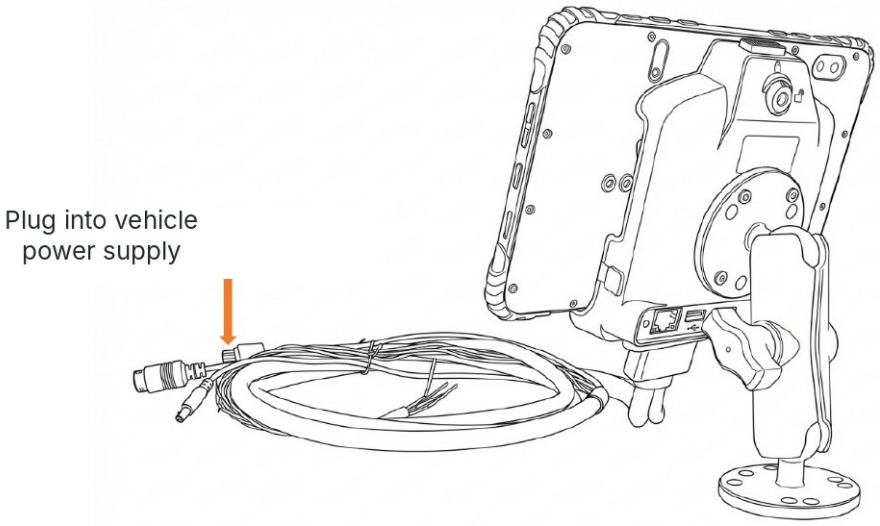

b) Connect a USB-C to USB-C cable from a USB PD fast-charging adapter or car charger (5 V/3 A, 9 V/2 A, or 12 V/2 A) to the device.

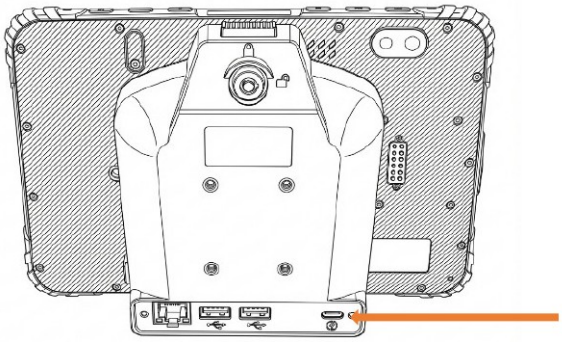

◆ **Warning: Please ensure that the input voltage of the cradle is within the range of 9V-36V (11V-36V when a camera is connected for video input). If the input voltage of the cradle is outside this range, the MDT880 may be unable to charge or damaged. It may void the warranty.**

Topicon HK Limited
2314-2316, Tower C, Huangdu Plaza, Yitian Road, Futian District, Shenzhen 518048, China

Chapter 4: Hand Strap and Carrying Options

4.1 Hand strap

1) How to install

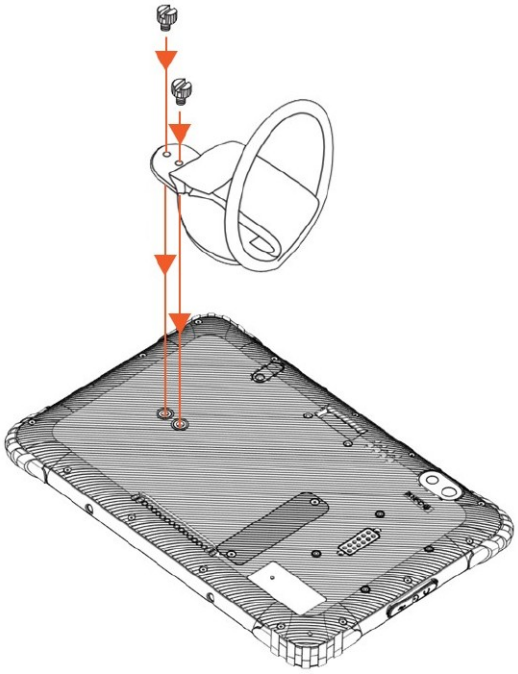

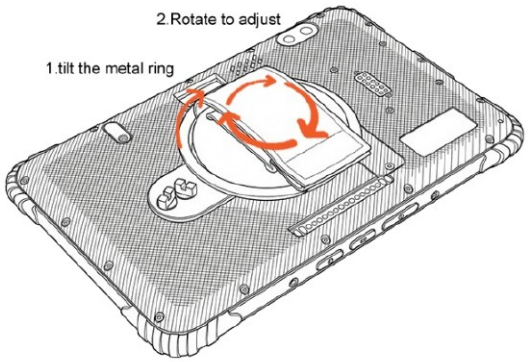

2）How to use

Easy to carry

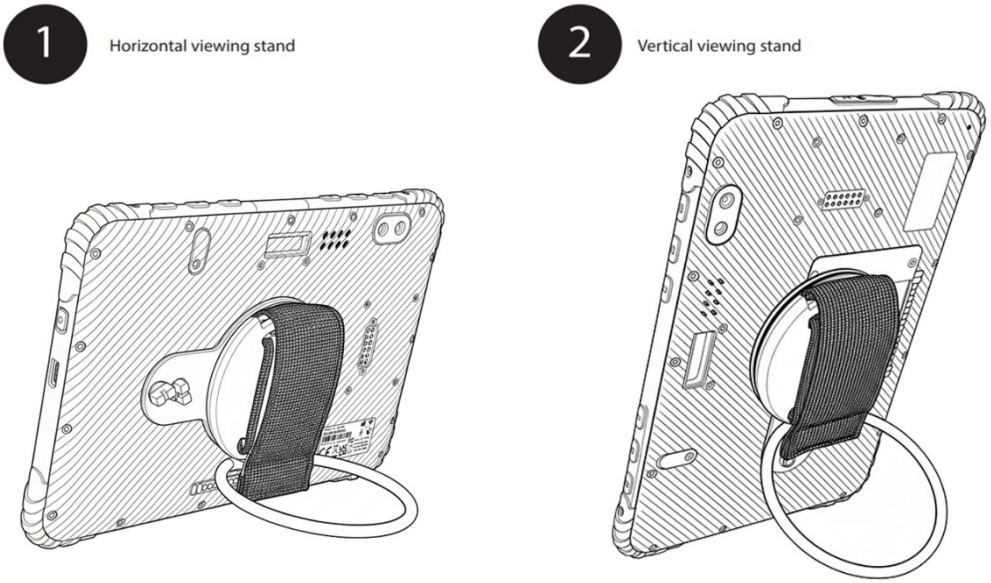

Topicon HK Limited
2314-2316, Tower C, Huangdu Plaza, Yitian Road, Futian District, Shenzhen 518048, China

3 Adjustable viewing hand strap

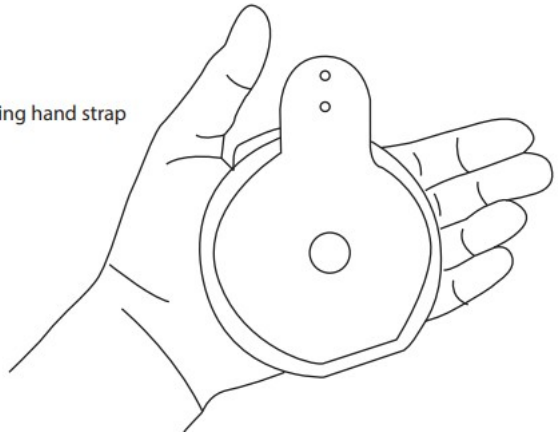

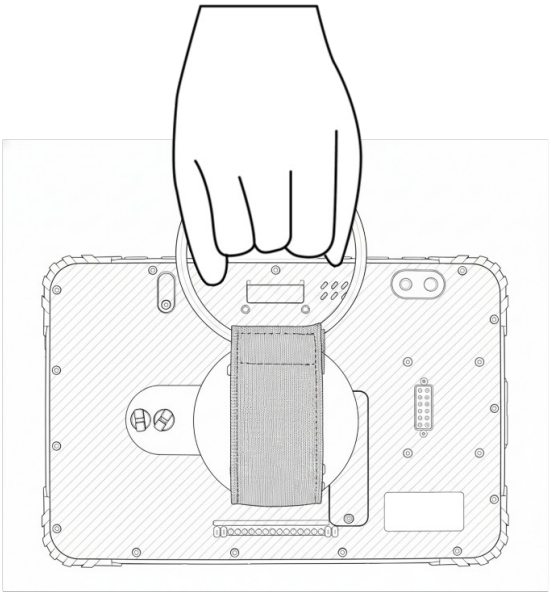

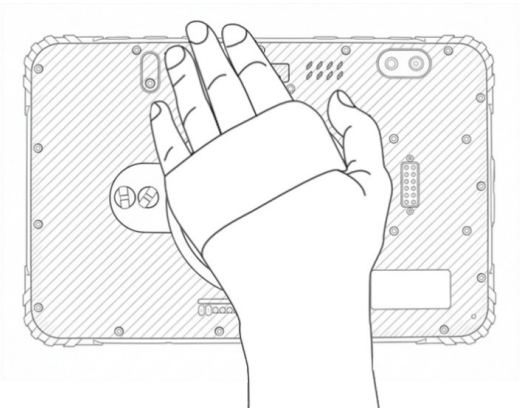

Topicon HK Limited
2314-2316, Tower C, Huangdu Plaza, Yitian Road, Futian District, Shenzhen 518048, China

4.2 Shoulder strap mode

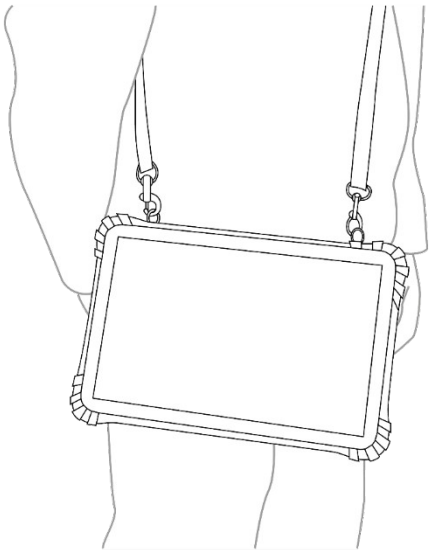

Topicon HK Limited
2314-2316, Tower C, Huangdu Plaza, Yitian Road, Futian District, Shenzhen 518048, China

Chapter 5: Cradle Usage Instructions

5.1 Using as a Vehicle Cradle

5.1.1 Mounting the RAM and Cradle

Assemble with cradle (Be a vehicle cradle)

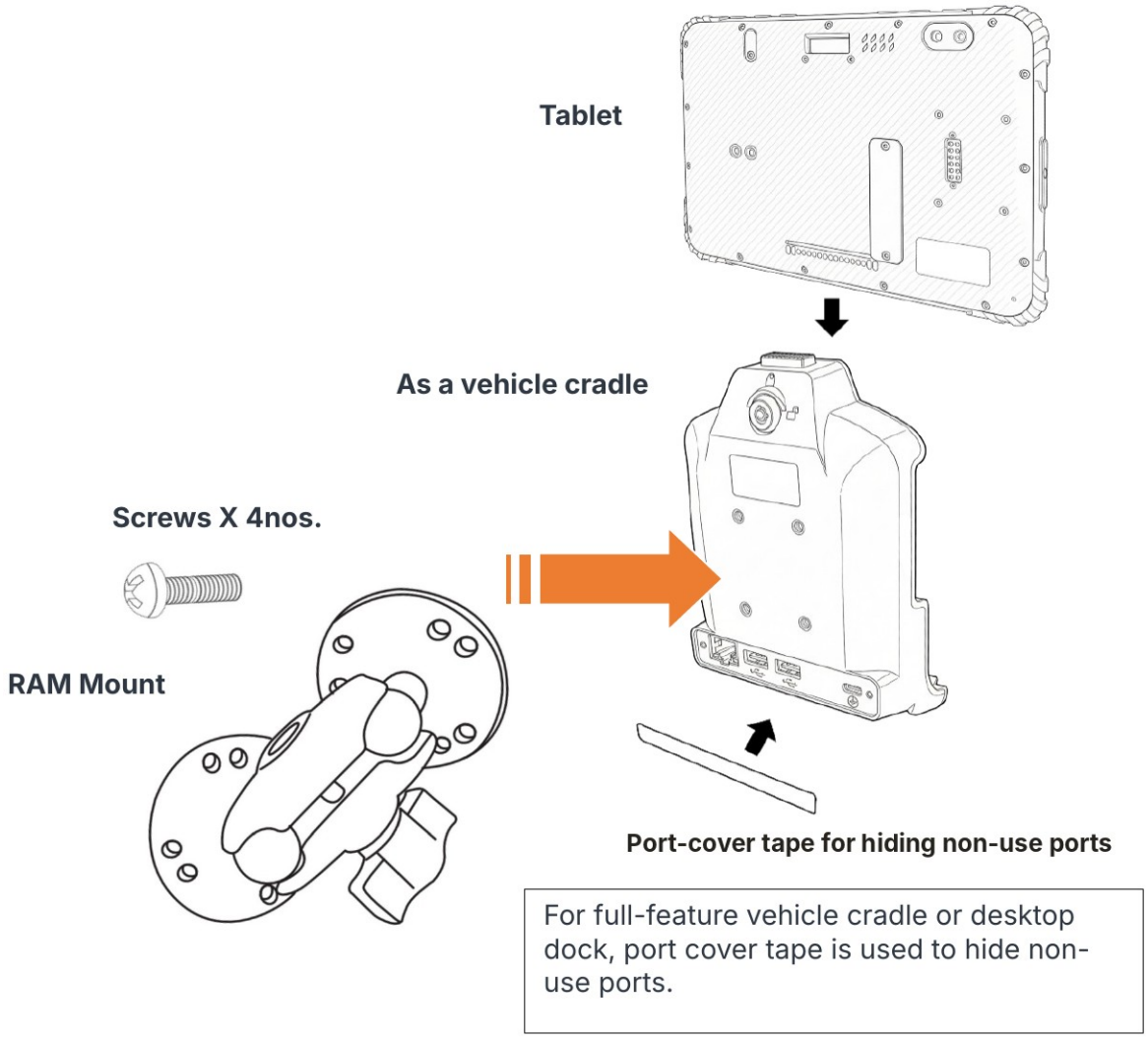

For full-feature vehicle cradle or desktop dock, port cover tape is used to hide non-use ports.

Topicon HK Limited
2314-2316, Tower C, Huangdu Plaza, Yitian Road, Futian District, Shenzhen 518048, China

5.1.2 Locking Device & Unlocking device

Insert the key to locking or unlocking the device

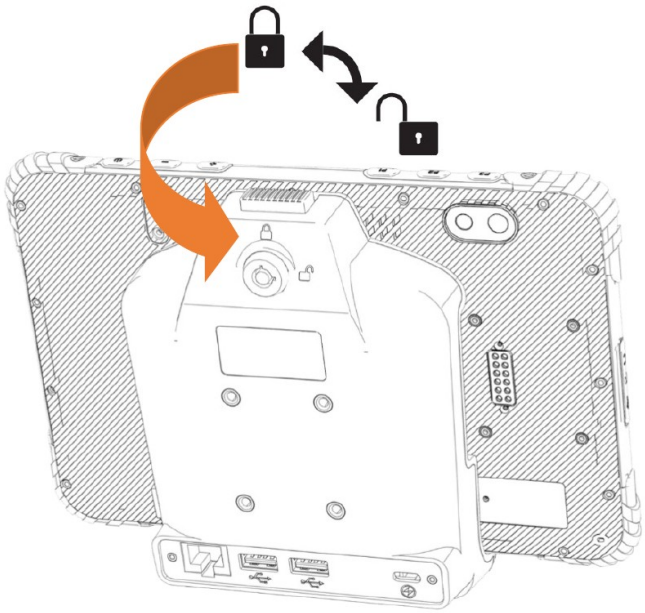

5.2 Using as a Desktop Dock Station

5.2.1 Install the Metal Stand

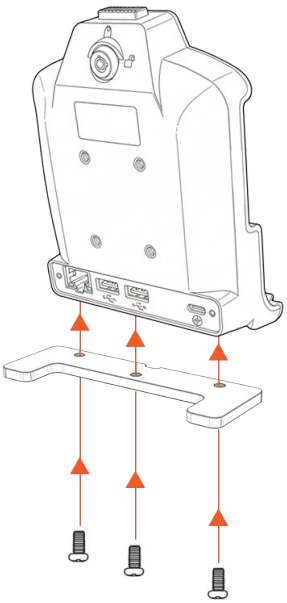

Topicon HK Limited
2314-2316, Tower C, Huangdu Plaza, Yitian Road, Futian District, Shenzhen 518048, China

5.2.2 Assemble with cradle (Be a desktop dock station)

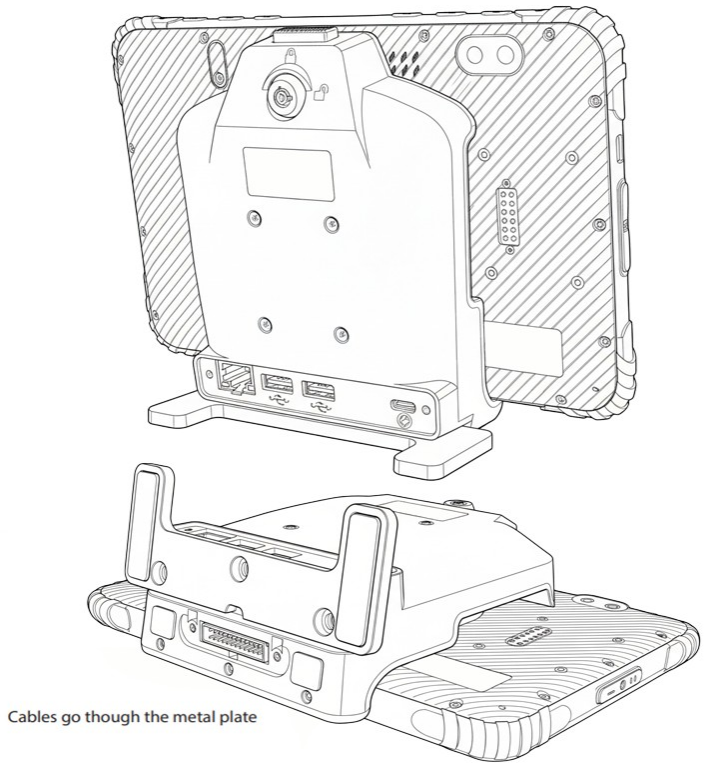

5.2.2 Fixed the cable

When installing in the vehicle, please use below metal parts, it has 2 purposes.

1. They route the cable toward the rear of the device.
2. They support the device, which is relatively heavy, so it does not vibrate with vehicle movement.

Several mounting options are available. The bracket can support the device from the bottom or from the rear at an angle, allowing different installation configurations. Refer to the two installation videos below.

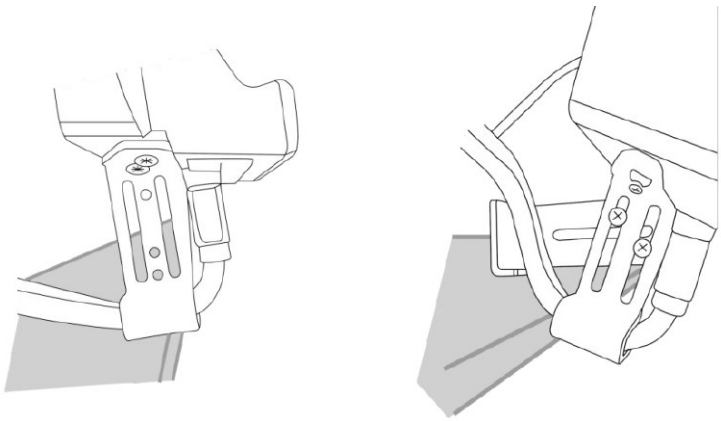

The bracket length is adjustable from 50 mm to 80 mm
https://drive.google.com/file/d/1ybp_Ji3AL1t94PQ_KVtJO9mk_J8UiY8Q/view?usp=sharing
https://drive.google.com/file/d/1etWxYVJcbXDs8J-GP0dq8IVuBiYc0t3S/view?usp=sharing

Topicon HK Limited
2314-2316, Tower C, Huangdu Plaza, Yitian Road, Futian District, Shenzhen 518048, China

Chapter 6: Using Hardware Interfaces

6.1 Using Serial Ports

1. The purple/white RS232 wires come from the CPU (same as MDT865) and work without external power.

2. RS232 orange/yellow wires and RS485 blue/brown wires are converted from USB Hub and will only work if there is an external power supply.

Wires color	Definition	Device tty ports
White	RS232 RXD (CPU)	/dev/ttyS1
Purple	RS232 TXD (CPU)	
Orange	RS232 RXD (USB)	/dev/ttyACM1
Yellow	RS232 TXD (USB)	
Blue	RS485-A	/dev/ttyACM2
Brown	RS485-B	

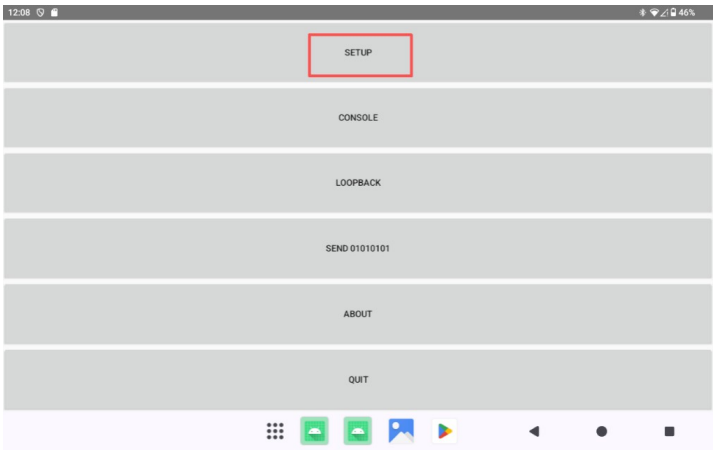

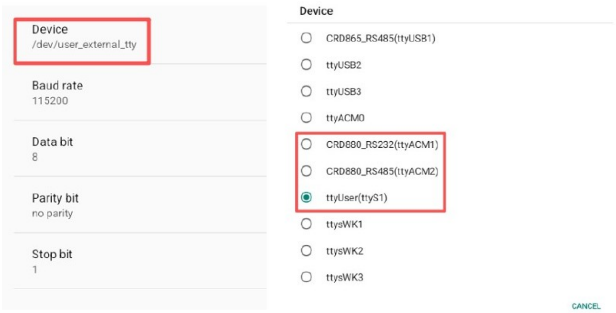

Topicon HK Limited
2314-2316, Tower C, Huangdu Plaza, Yitian Road, Futian District, Shenzhen 518048, China

6.2 Using GPIO

On MDT880:
CRD880 with the full-feature cable set — 4 GPIO;
CRD880-CAM-FULL — 4 GPIO with the basic cable set or 5 GPIO with the CAN cable set;
CRD880-CAN — 5 GPIO;
CRD880-M12 — 4 GPIO with the full-feature cable set.

6.2.1 GPIO Tail Lines Instruction

Regarding the definition diagram of GPIO interface, please see the details in Chapter 1 “1.2 Cradle Cable definition”.

6.2.2 GPIO_DEMO Instruction

It includes two input, one output and one ADC.
This software is only used for testing GPIO functions of device, and it isn't suitable for user's standard software.

a. **If the input1 or input2 is connected to a high power, key1 or key2 will display “true”**
b. **Press set output1 button to open output, and press reset output1 button to close output.**
c. **Press get adc button to read the input voltage.**
d. **Press upgrade button to update the MCU firmware.**

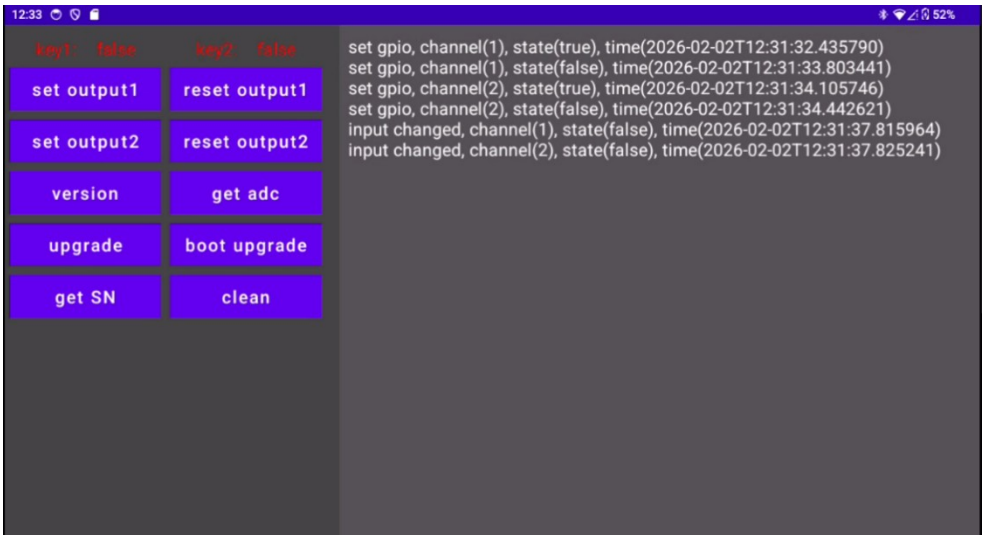

6.3 Using NFC Function

6.3.1 NFC Activation Method

Activate the NFC function in the settings.
Settings > Connected devices > Connection preferences > NFC > turn on Use NFC

Topicon HK Limited
2314-2316, Tower C, Huangdu Plaza, Yitian Road, Futian District, Shenzhen 518048, China

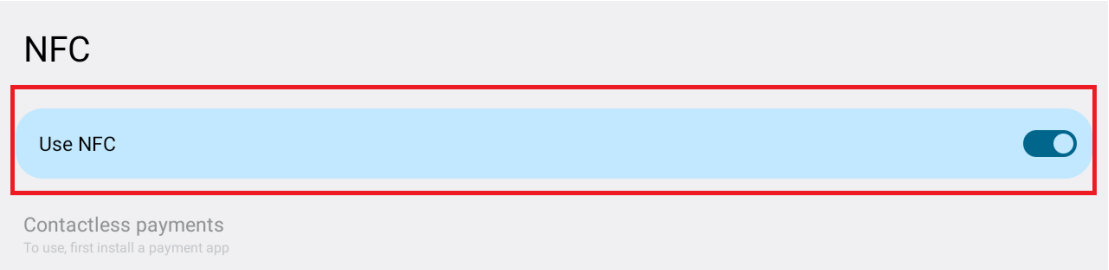

6.3.2 NFC Usage Demo

Front access, easy for driver to login

After activating NFC function, place the NFC card close to the induction area. A beep sounds when the card is detected.
MDT880 NFC

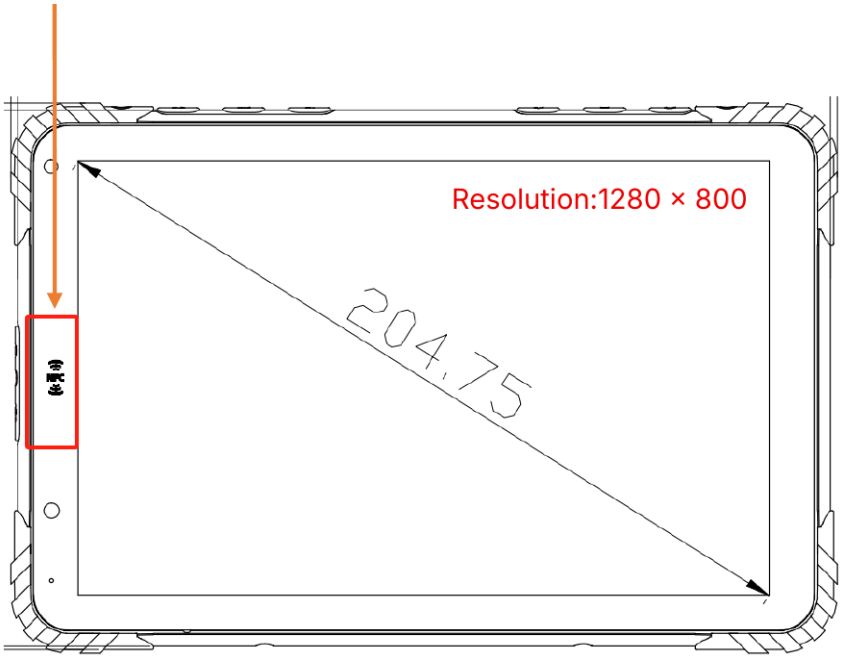

6.4 Using eSIM Function

The MDT880 has a built-in eSIM, but it cannot be used simultaneously with the 2nd physical SIM card, only one can be used at a time.

The eSIM will not work after inserting the 2nd physical SIM card. After removing the 2nd physical SIM card, you will need to restart the device to enable the eSIM.
Make sure that the device is connected to the network.

- **Add eSIM profile (Up to 3–5 eSIM profiles can be stored.)**

Topicon HK Limited
2314-2316, Tower C, Huangdu Plaza, Yitian Road, Futian District, Shenzhen 518048, China

Go to the phone App > Dial *#*#8900#*#* to access the eSIM App
Click "+" to add your eSIM profile.

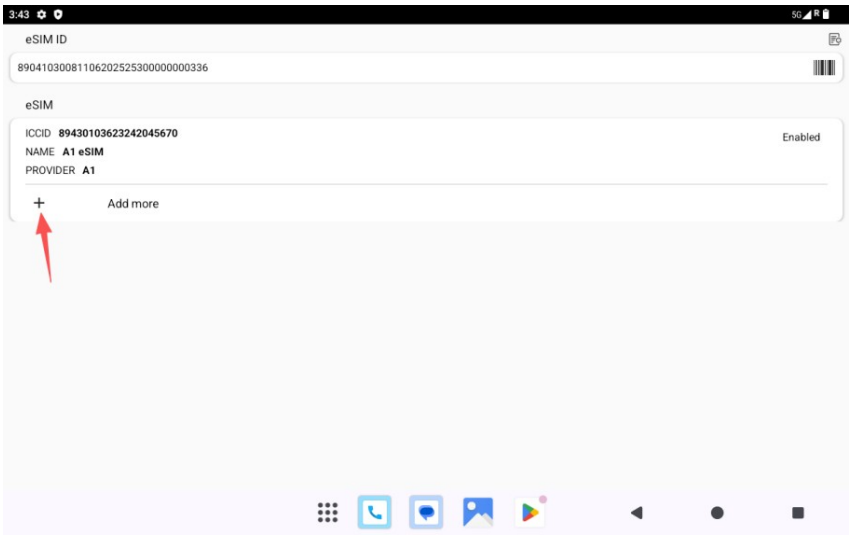

Two ways to add eSIM profile.
You can add an eSIM profile by scanning the operator's QR code or entering an activation code.

1) Add eSIM profile by scanning the QR code

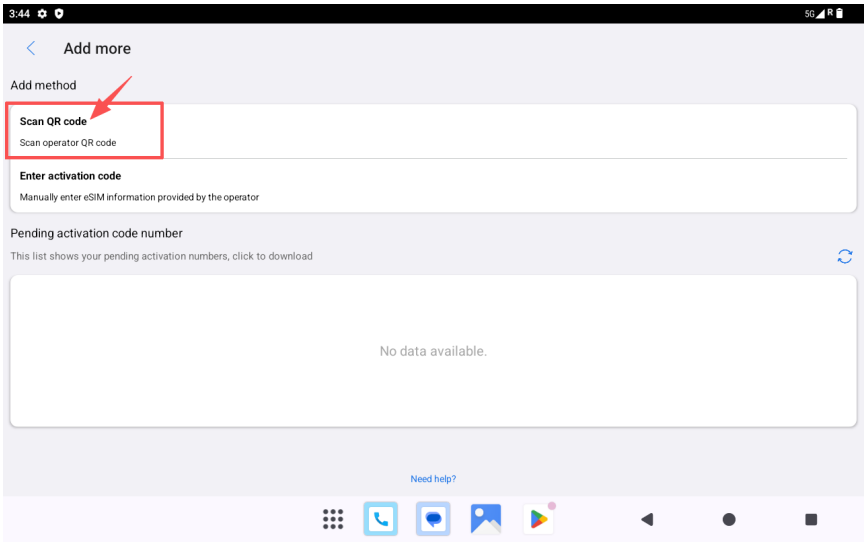

2) Add an eSIM profile by entering an activation code.

Topicon HK Limited
2314-2316, Tower C, Huangdu Plaza, Yitian Road, Futian District, Shenzhen 518048, China

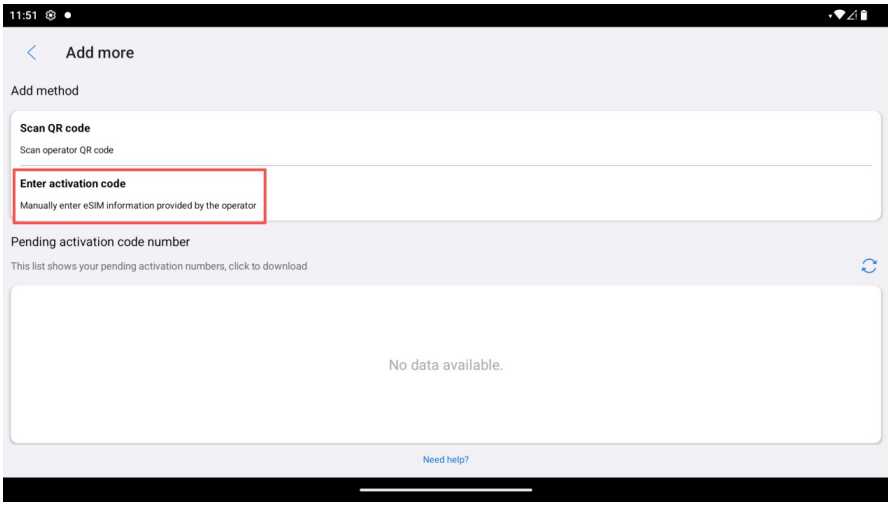

Enter Activation code

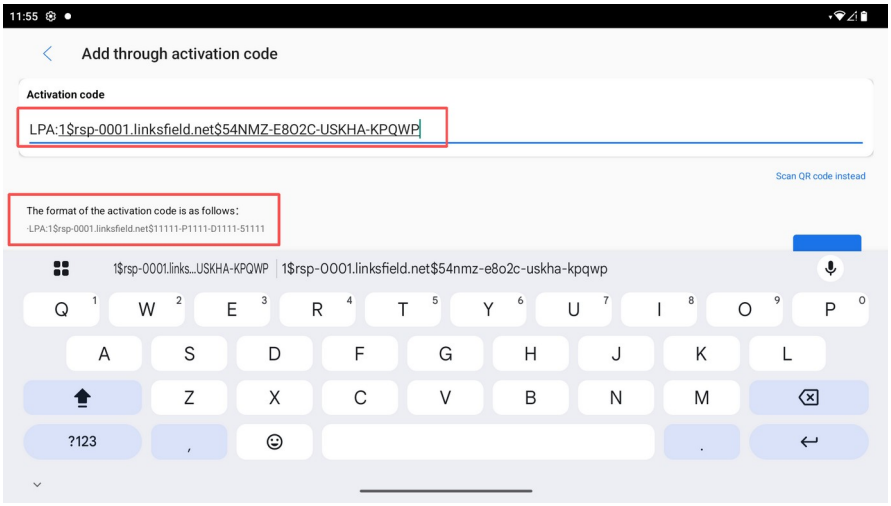

- **Erase eSIM profile**

1)Dial *#*#8900#*#* to open the eSIM application

2)Disable the "Use SIM card" option

3) Erase SIM



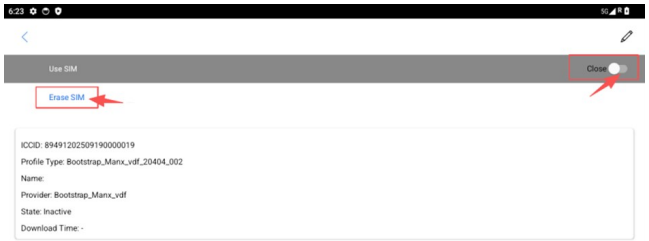

Topicon HK Limited
2314-2316, Tower C, Huangdu Plaza, Yitian Road, Futian District, Shenzhen 518048, China

Chapter 7: Specifications

Durability Features	
IP67 Rating Certified 1.2m / 4 ft. to drop per MIL-STD-810H Raised bezel for LCD impact protection	
LCD Display	
Size	Digital IPS Panel
Resolution	8-inch, 1280 × 800
Brightness	typ. 1000 cd/m²
Touch screen	
Type	Multi-point Capacitive Touch
System	
CPU	MediaTek 64-bit Octa-core processor 2X Arm Cortex-A76 up to 2.2GHz 6X Arm Cortex-A55 up to 2.0GHz
OS	Android 14 or Android 16
Memory	8GB LPDDR4X
Storage	128GB UFS2.2
Audio	2x Integrated microphone
	1 x Integrated speaker
	1 x 3.5mm stereo headphone jack
GNSS	GPS
	GLONASS
	GALILEO
WWAN	**EUR:** 2G: 850,900,1800,1900MHz 3G: B1, B2, B4, B5, B6, B8, B19 4G: B1/2/3/5/7/8/20/28AB/38/39/40/41(194MHz) 5G: NR: N1/3/5/7/8/20/28/38/41/77/78 **NAR:** 2G: 850/900/1800/1900MHz 3G: B1/2/4/5 4G: B1/2/3/4/5/12/13/17/18/19/25/26/28/30/38/41/66/71 5G: NR: N2/5/25/41/48/66/71/77/78
WLAN	802.11a/b/g/n/ac 2.4 GHz and 5 GHz
Ethernet	1x RJ45 Connector on the cradle
Bluetooth	2402MHz-2480MHz Integrated Bluetooth V5.0, with HID, A2DP, AVRCP, BIP, BPP, FTP, HFP, HSP, OPP, SPP supported

Topicon HK Limited
2314-2316, Tower C, Huangdu Plaza, Yitian Road, Futian District, Shenzhen 518048, China

Sensor	Gyroscope
	Accelerometer (G-sensor)
	Compass
	Light Sensor
NFC	• Active and passive Peer-to-Peer – ISO/IEC 18092 - NFCIP-1 Initiator & Target • Passive mode – Reader/Writer – NFC Forum Type 1/2/3/4/5 tags – ISO/IEC 15693 – MIFARE Classic(a)(b) – Thin film (ex Kovio) Barcode • Active mode – Card Emulation – ISO/IEC 14443 Type A & B – JIS X 6319 – 4 – MIFARE Classic(a)(b) through SWP-CLT
Camera	Rear Camera: 40MP
Video input (optional)	Support 4 x up to 1080p AHD camera with CRD880 cradle
Barcode scanner (optional)	Barcode Expansion Module (Motorola SE4107) 1D / 2D Barcodes can be scanned.
Barometer (optional)	Barometer Expansion Module
LoRa (optional)	LoRa Expansion Module
I/O Interface (standard)	
Serial Port	1 x RS232 and 1 x RS232/RS485 (with dock)
USB Port	1 x USB-C 2.0 (Host or Device) (can't be used when put on the docking station) 2 x USB-A 2.0 OTG on the full features cradle
SD Slot	1 x Micro SD card, up to 512 GB
SIM Socket	2 x Nano-SIM or 1 x Nano-SIM, 1 x eSIM
Power Supply	
Power System	Power by AC Adapter (PD Fast-charging 5V/3A 9V/2A 12V/2A)
	Power by docking station 9-36V input (11-36V when a camera is connected for video input)
Battery Type	Lithium-ion rechargeable battery
Battery Capacity	3.8 V, 8000 mAh
Mechanical & Environmental	
Operating Temp.	-20 °C to 60 °C (-4 °F to 140 °F)
Storage Temp.	-20°C to 70°C (-4°F to 158°F)
Operating Humidity	90% RH (non-condensing)
Dimensions	207 mm L x 138 mm W x 17 mm D
Weight Tablet	615g

Topicon HK Limited
2314-2316, Tower C, Huangdu Plaza, Yitian Road, Futian District, Shenzhen 518048, China

Chapter 8: Software Support

Demo application and source code available

We can provide demo applications such as reading ignition status, AVIN camera, Serial port, GPIO, barcode scanner and NFC etc. Please contact our Sales for details.

Supplementary APIs

https://docs.google.com/document/d/1Gexs5OU_HRoFK5F3bM27-OLFCvJYQcGmbgqCqNcvaNw/edit?usp=sharing

Example source code and applications are provided.

Serial port access

Package installation

Power management

Cradle detection

Notification blocker

Additional IOs

Programmatic firmware upgrade and configuration

How to use the hotspot proxy

GPIO of Cradle CRD865 and CRD1065

How to Prevent Repeated USB Permission Pop-ups - Android Application Configuration Guide

Enable Roaming Proxy

UnmountProxy APK (mount/unmount SD card)

Customization Services

Topicon's device management server is designed to let customers update firmware and enable kiosk mode:

- BOOT ANIMATION
- INSTALL APK
- ADD APN
- DEFAULT SETTING
- CUSTOMIZED BUTTON

For details, refer to the Remote Control Server Manual and the Kiosk Mode Quick Start Guide.

Remote control server manual

Kiosk mode quick start guide

Topicon HK Limited
2314-2316, Tower C, Huangdu Plaza, Yitian Road, Futian District, Shenzhen 518048, China

Chapter 9: Radio Parameters

Bands Covered by the RF Test Report (EU variant)

Note: Bands listed below are covered by the EU (CE/RED) test report. The NAR variant is tested separately. The complete operating band list for both variants is given in Chapter 7.

Technical Characteristics of EUT	
2G	
Support Networks:	GSM, GPRS, EDGE
Support Bands:	GSM900, DCS1800
Frequency Range:	GSM900: Tx: 880-915MHz, Rx: 925-960MHz
	DCS1800: Tx: 1710-1785MHz, Rx: 1805-1880MHz
RF Output Power:	GSM900: 33.88dBm, GSM1800: 30.40dBm EDGE900: 22.86dBm, EDGE1800: 22.04dBm
Modulation Type:	GMSK, 8PSK
Type of Antenna:	FPC Antenna
Antenna Gain:	GSM900: -1.75dBi, DCS1800: -0.64dBi
GPRS/EDGE Class:	Class 12
3G	
Support Networks:	WCDMA, HSDPA, HSUPA
Support Bands:	WCDMA Band 1, WCDMA Band 8
Frequency Range:	WCDMA Band 1: Tx: 1920-1980MHz, Rx: 2110-2170MHz
	WCDMA Band 8: Tx: 880-915MHz, Rx: 925-960MHz
RF Output Power:	WCDMA Band 1: 22.14dBm, WCDMA Band 8: 23.01dBm
Modulation Type:	BPSK, QPSK, 16QAM
Antenna Type:	FPC Antenna
Antenna Gain:	WCDMA Band 1: 1.18dBi, WCDMA Band 8: -1.75dBi
4G	
Support Bands:	FDD-LTE Band1, 3, 7, 8, 20, 28, TDD-LTE Band 38, 40, 41
Frequency Range:	FDD-LTE Band 1: Tx: 1920-1980MHz, Rx: 2110-2170MHz
	FDD-LTE Band 3: Tx: 1710-1785MHz, Rx: 1805-1880MHz
	FDD-LTE Band 7: Tx: 2500-2570MHz, Rx: 2620-2690MHz
	FDD-LTE Band 8: Tx: 880-915MHz, Rx: 925-960MHz
	FDD-LTE Band 20: Tx: 832-862MHz, Rx: 791-821MHz
	FDD-LTE Band 28: Tx: 703-748MHz, Rx: 758-803MHz
	TDD-LTE Band 38: Tx: 2570-2620MHz, Rx: 2570-2620MHz
	TDD-LTE Band 40: Tx: 2300-2400MHz, Rx: 2300-2400MHz
	TDD-LTE Band 41: Tx: 2496-2690MHz, Rx: 2496-2690MHz

Topicon HK Limited
2314-2316, Tower C, Huangdu Plaza, Yitian Road, Futian District, Shenzhen 518048, China

Max.RF Output Power:	FDD-LTE Band 1: 22.41dBm, FDD-LTE Band 3: 23.18dBm, FDD-LTE Band 7: 22.64dBm, FDD-LTE Band 8: 23.45dBm, FDD-LTE Band 20: 23.58dBm, FDD-LTE Band 28: 23.22dBm, TDD-LTE Band 38: 23.35dBm, TDD-LTE Band 40: 22.75dBm TDD-LTE Band 41: 23.06dBm
Modulation Type:	QPSK, 16QAM
Antenna Type:	FPC Antenna
Antenna Gain:	FDD-LTE Band 1: 1.18dBi, FDD-LTE Band 3: -0.64dBi, FDD-LTE Band 7: 1.04dBi, FDD-LTE Band 8: -1.75dBi, FDD-LTE Band 20: -1.85dBi, FDD-LTE Band 28: -3.81dBi, TDD-LTE Band 38: 1.3dBi, TDD-LTE Band 40: -1.53dBi, TDD-LTE Band 41: 1.3dBi,
5G NR Bands Covered by the RF Test Report (EU variant) **Note: SA bands below are those covered by the EU test report. Bands n1/n3/n5/n7/n8/n20/n77 and the NAR NR bands (n2/n5/n25/n41/n48/n66/n71/n77/n78) are supported by the module but are not included in this report; the NAR variant is tested separately.**	
SA Band:	N28, N38, N41, N78
NSA Band:	/
Frequency Range:	N28: Tx: 703-748MHz, Rx: 758-803MHz
	N38: Tx: 2570-2620MHz, Rx: 2570-2620MHz
	N41: Tx: 2496-2690MHz, Rx: 2496-2690MHz
	N78: Tx: 3300-3800MHz, Rx: 3300-3800MHz
Modulation Type:	UL & DL up to 256QAM
Max.RF Output Power:	N28: 25.01dBm N38: 24.07dBm N41: 27.35dBm N78: 27.34dBm
Antenna Type:	FPC Antenna
Antenna Gain:	N28: -3.81dBi N38: 0.39dBi N41: 0.39dBi N78: 2.13dBi
Bluetooth	
Bluetooth Version:	Bluetooth V5.0
Frequency Range:	2402MHz-2480MHz
Max.RF Output Power:	3.76dBm (EIRP)
Type of Modulation:	GFSK, π/4 DQPSK, 8DPSK
Data Rate:	1Mbps, 2Mbps, 3Mbps
Quantity of Channels	79/40
Channel Separation:	1MHz/2MHz
Type of Antenna:	PIFA Antenna

Topicon HK Limited
2314-2316, Tower C, Huangdu Plaza, Yitian Road, Futian District, Shenzhen 518048, China

Antenna Gain:	-1.07dBi
Wi-Fi (2.4GHz)	
Support Standards:	802.11b, 802.11g, 802.11n-HT20/40
Frequency Range:	2412-2472MHz for 802.11b/g/n(HT20) 2422-2462MHz for 802.11n(HT40)
Max.RF Output Power:	16.70dBm (EIRP)
Type of Modulation:	CCK, OFDM, QPSK, BPSK, 16QAM, 64QAM
Quantity of Channels	13 for 802.11b/g/n(HT20), 9 for 802.11n(HT40)
Channel Separation:	5MHz
Type of Antenna:	PIFA Antenna
Antenna Gain:	-1.07dBi
NFC	
Frequency Range:	13.56MHz
Radiated H-Field:	-2.90dBuA/m(@3m)
Modulation:	ASK
Type of Antenna:	FPC Antenna
Antenna Gain:	0dBi
Transmitter Product Class	1
Lora	
Frequency Range:	868.00MHz-868.6MHz 869.4MHz-869.650MHz
RF Output Power:	0.85dBm(ERP)
Type of Modulation:	FSK
Type of Antenna:	FPC Antenna
Antenna Gain:	2dBi
Receiver Categories:	2
GPS	
Frequency Range:	1575.42MHz Receiving 1176.45MHz Receiving

Chapter 10: Safety and Regulatory Compliance

◆ **Operating temperature: -20 °C to 60 °C; use outside this range may damage the product. The product is intended for use below 2000 m altitude.**

For the following equipment:
Product Name: Tablet
Brand Name: /
Model No.: MDT880
TOPICON HK LIMITED

Topicon HK Limited
2314-2316, Tower C, Huangdu Plaza, Yitian Road, Futian District, Shenzhen 518048, China

E-mail: keller.sin@topicon.hk

hereby declares that this [Name: Tablet, Model: MDT880] is in compliance with the essential requirements and other relevant provisions of Directive 2014/53/EU.

CE

The full text of the EU declaration of conformity is available at the following link:
Admin_DoC_MDT880_RED.pdf

The product shall only be connected to a USB interface of version USB 2.0 and that the connection to a power USB is allowed.

◆ **WARNING: Risk of hearing impairment. Prolonged exposure to high sound pressure levels from earphones or headphones can cause permanent hearing loss.**



CAUTION
RISK OF EXPLOSION IF BATTERY IS REPLACED
BY AN INCORRECT TYPE.
DISPOSE OF USED BATTERIES ACCORDING
TO THE INSTRUCTIONS

Adapter shall be installed near the equipment and shall be easily accessible.
Only can use adapter as below:
Power Adapter Model: GS-W20A0938C
Input: 100–240 V AC, 50/60 Hz, 0.6 A max
Output: 5Vd.c. 3A or 9Vd.c. 2.22A or 12Vd.c. 1.67A
Shenzhen Good-she technology Co., Ltd
This product is intended for sale and application in a business environment.
RED Article 10 2
-This product can be used across EU member states
RED Article 10 10
-The product is class 1 product, No restrictions

The RF distance between body and product is 0mm

FCC RF Exposure Information and Statement

This device meets the government's requirements for exposure to radio waves. The guidelines are based on standards that were developed by independent scientific organizations through periodic and

Topicon HK Limited
2314-2316, Tower C, Huangdu Plaza, Yitian Road, Futian District, Shenzhen 518048, China

thorough evaluation of scientific studies. The standards include a substantial safety margin designed to assure the safety of all persons regardless of age or health. The SAR limit of USA (FCC) is 1.6 W/kg averaged. Device types: Tablet (FCC ID: 2AHAF-MDT880) has also been tested against this SAR limit. SAR information can be viewed on-line at http://www.fcc.gov/oet/ea/fccid/. Please use the device FCC ID number for search. This device was tested under typical conditions at 0 mm from the body.
To maintain compliance with FCC RF exposure requirements, accessories must:
- maintain the separation distance stated above from the user's body,
- contain no metallic components in their assembly.
Accessories that do not satisfy these requirements may not comply with FCC RF exposure requirements and should be avoided.

This device has been tested and meets the IC RF exposure guidelines when used with an accessory designated for this product or when used with an accessory that contains no metal and that positions the handset a minimum of 0mm from the body. Noncompliance with the above restrictions may result in violation of RF exposure guidelines.

Cet appareil a été testé et répond aux directives d'exposition RF IC lorsqu'il est utilisé avec un accessoire désigné pour ce produit ou lorsqu'il est utilisé avec un accessoire qui ne contient pas de métal et qui positionne le téléphone à un minimum de 0 mm du corps. Le non-respect des restrictions ci-dessus peut entraîner une violation des lignes directrices relatives à l'exposition aux RF.

FCC Warning

This device complies with Part 15 of the FCC Rules. Operation is subject to the following two conditions: (1) This device may not cause harmful interference, and (2) this device must accept any interference received, including interference that may cause undesired operation.

Note: This equipment has been tested and found to comply with the limits for a Class B digital device, pursuant to part 15 of the FCC Rules. These limits are designed to provide reasonable protection against harmful interference in a residential installation. This equipment generates, uses and can radiate radio frequency energy and, if not installed and used in accordance with the instructions, may cause harmful interference to radio communications. However, there is no guarantee that interference will not occur in a particular installation. If this equipment does cause harmful interference to radio or television reception, which can be determined by turning the equipment off and on, the user is encouraged to try to correct the interference by one or more of the following measures:
—Reorient or relocate the receiving antenna.
—Increase the separation between the equipment and receiver.
—Connect the equipment into an outlet on a circuit different from that to which the receiver is connected.
—Consult the dealer or an experienced radio/TV technician for help.

NOTE 2: Any changes or modifications to this unit not expressly approved by the party responsible for compliance could void the user's authority to operate the equipment.

Topicon HK Limited
2314-2316, Tower C, Huangdu Plaza, Yitian Road, Futian District, Shenzhen 518048, China

IC WARNING

This device contains licence-exempt transmitter(s) that comply with Innovation, Science and Economic Development Canada's licence-exempt RSS(s). Operation is subject to the following two conditions:
(1) This device may not cause interference.
(2) This device must accept any interference, including interference that may cause undesired operation of the device.

L'émetteur/récepteur exempt de licence contenu dans le présent appareil est conforme aux CNR d'Innovation, Sciences et Développement économique Canada applicables aux appareils radio exempts de licence. L'exploitation est autorisée aux deux conditions suivantes:
1. L'appareil ne doit pas produire de brouillage;
2. L'appareil doit accepter tout brouillage radioélectrique subi, même si le brouillage est susceptible d'en compromettre le fonctionnement.

Topicon HK Limited
2314-2316, Tower C, Huangdu Plaza, Yitian Road, Futian District, Shenzhen 518048, China