Rugged Tablet

MDT865

8 Inch **4G** Rugged Android Vehicle Display Terminal

User Manual

Version 4.0



Topicon HK Limited
2314-2316, Tower C, Huangdu Plaza, Yitian Road, Futian District, Shenzhen 518048, China

Revision History

Version	Release Time	Description
1.0	202305	Initial Release
2.0	202311	Add Metal bracket
3.0	202503	Add LAN bracket
4.0	202604	Add CRD865-CAN Cradle

Copyright

Copyright © Topicon HK Limited. All Rights Reserved. This document contains proprietary information protected by copyright.

About This Manual

This user's manual provides the general information and installation instructions for the product. The manual is meant for the experienced users and integrators with hardware knowledge of Android devices. If you are not sure about any description in this manual, consult your vendor before further handling.

We recommend that you keep one copy of this manual for the quick reference for any necessary maintenance in the future.
Thank you for choosing TOPICON Tablet products.

Safety Precautions

Charge and discharge the device once at room temperature if it has been stored for more than 3 months.

Do not attempt to repair, modify, or disassemble the device without proper knowledge; doing so may cause dangerous situations and damage the product.

Do not use the device in extreme temperatures; this may damage the battery and shorten product life. Avoid prolonged exposure to direct sunlight.

Topicon HK Limited
2314-2316, Tower C, Huangdu Plaza, Yitian Road, Futian District, Shenzhen 518048, China

Table of Contents

Chapter 1: Introduction 5
1.1 Product Introduction 5
1.2 Key Features and Specifications 5
1.3 Parts of the Device 5
Chapter 2: Accessories and Expansion Options 7
2.1 Connecting Cradles 7
2.1.1 CRD865 Cradle 9
2.1.2 BKT865 Metal Bracket 18
2.1.3 BKT865-LAN Metal Bracket 20
2.2 Cradle Cable Pin Assignment Overview 22
2.2.1 CAB-865-2RS232 22
2.2.2 CAB-EX-RS232 23
2.2.3 CAB-HUB-BASIC 23
2.2.4 CAB-BMW-BASIC 24
2.2.5 CAB-MB-FULL 25
2.2.6 CAB-EX-FULL 26
2.2.7 CAB-EX-HUB 27
2.2.8 CAB-OTG-BASIC 28
2.2.9 CAB-EX-BASIC 28
2.2.10 CAB-865-BASIC 29
2.2.11 CAB-EX-2M/ CAB-EX-5M 30
2.2.12 BKT865-BAS-01 31
2.2.13 BKT865-BAS-02 31
2.2.14 BKT865-BAS-BMW 32
2.3 Accessories 32
2.3.1 Cradles 32
2.3.2 Expansion Modules 34
2.3.3 Chargers 34
2.3.4 USB Fingerprint Reader 35
2.3.5 Other Accessories 35

Topicon HK Limited
2314-2316, Tower C, Huangdu Plaza, Yitian Road, Futian District, Shenzhen 518048, China

Chapter 3: Getting Started 37
3.1 Power On/Off and Sleep/Wake 37
3.2 Installing Micro SD and SIM Card 38
3.3 Charging the Battery 38
3.4 Charging via Vehicle Power Supply 39
Chapter 4: Hand strap and shoulder strap mode 40
4.1 Hand strap 40
4.2 Shoulder strap mode 42
Chapter 5: Using the Docking Station 43
5.1 Vehicle Cradle Mode 43
5.2 Desktop Dock Mode 45
Chapter 6: Using Hardware Interface 48
6.1 Using Serial Port 48
6.2 Using GPIO 49
6.3 Using NFC Function 50
Chapter 7: Specifications 52
Chapter 8: Software Support 54
Chapter 9: Radio Parameters 55
Chapter 10: Safety and regulatory compliance 57

Topicon HK Limited
2314-2316, Tower C, Huangdu Plaza, Yitian Road, Futian District, Shenzhen 518048, China

Chapter 1: Introduction

1.1 Product Introduction

The MDT865 is a rugged Android tablet built for professional mobility across vehicle, field, and fixed-site applications.

Designed to operate reliably in demanding environments, it integrates reliable processing, 4G LTE connectivity, and a durable industrial-grade housing.

The flexible cradle-based design enables use as both an in-vehicle terminal and a docked workstation, supporting diverse operational workflows.

1.2 Key Features and Specifications

- MediaTek Octa-Core (*2x Cortex-A75 @ 2.0GHz + 6x Cortex-A55 @ 1.8GHz*)
- Android 14 or Android 16 Operating System
- Comply with IP67 rated
- WIFI, Bluetooth, LTE, GNSS and 8000mAh rechargeable battery supported
- 8-inch MIPI LCD, 1280 × 800, multi-point capacitive touch, 1000 nits, anti-glare
- 1.2m / 4 ft. to drop per MIL-STD-810G
- 2 in 1 cradle which can be used for vehicle cradle or desktop station

1.3 Parts of the Device

This section describes the external components, buttons, and interfaces of the MDT865.

Topicon HK Limited
2314-2316, Tower C, Huangdu Plaza, Yitian Road, Futian District, Shenzhen 518048, China

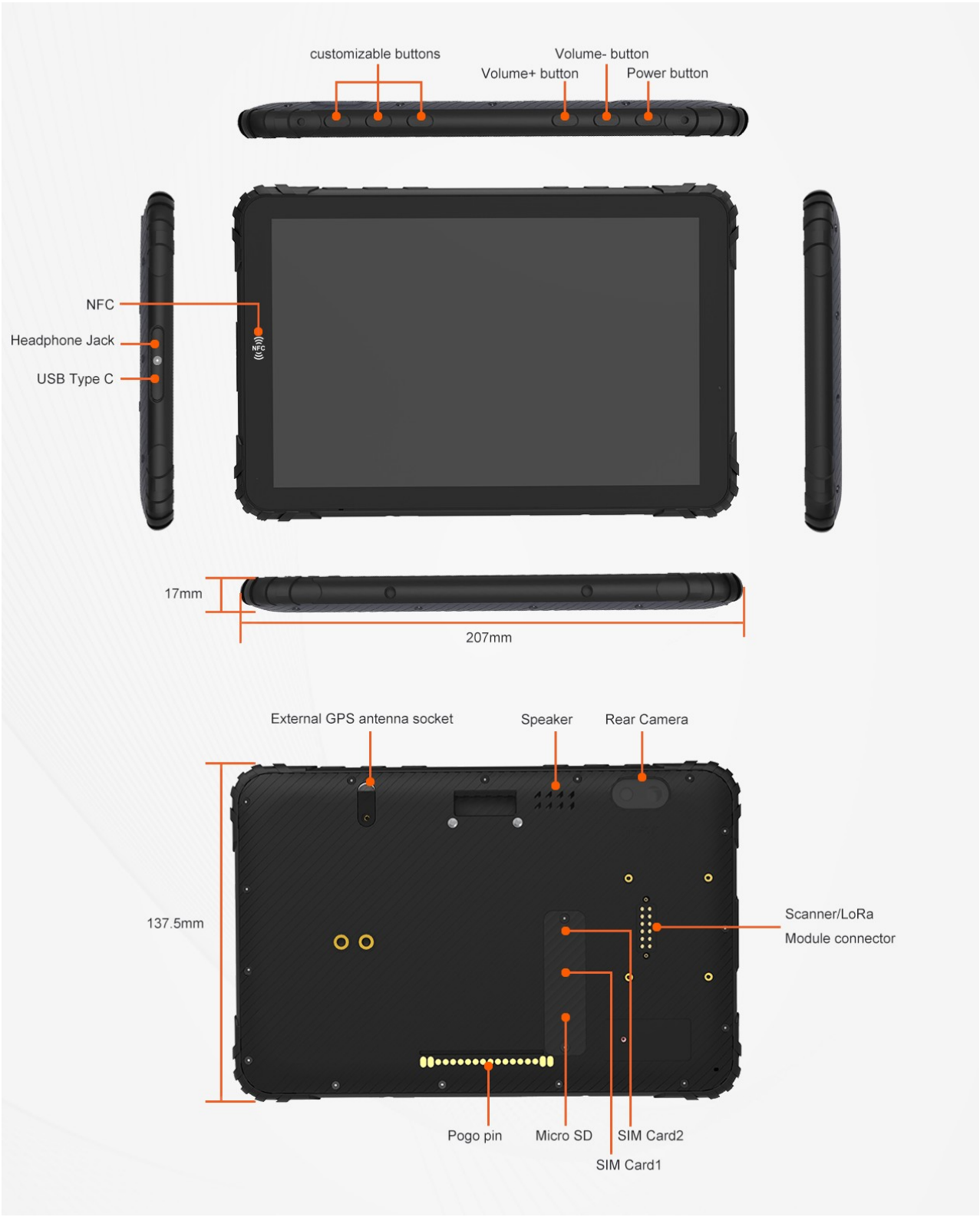

Topicon HK Limited
2314-2316, Tower C, Huangdu Plaza, Yitian Road, Futian District, Shenzhen 518048, China

Chapter 2: Accessories and Expansion Options

2.1 Connecting Cradles

Summary of functions achieved by cradles and cables combination			
Links	**Cradles**	**Cables**	**Features**
CRD865 (TYPE-A)		CAB-865-2RS232 CAB-EX-RS232 CAB-BMW-BASIC/CAB-BMW-AVIN CAB-EX-BASIC	● VCC /IGN DC9-36V input* ● 2× USB-A (OTG) ● 1× USB-C (Charge) ● 1× RJ45(Ethernet) ● 2× RS232 ● 1× RS485 ● 4× GPIO ● 1× Camera (Video input) (On Cradle)
CRD865 (TYPE-B)		CAB-MB-FULL CAB-EX-FULL CAB-EX-HUB Video cable	● VCC /IGN DC9-36V input* ● 2× USB-A (OTG) ● 1× USB-C (Charge) ● 1× RJ45(Ethernet) ● 2× RS232 ● 1× RS485 ● 4× Camera (Video input) (With Camera Hub) ● 1× Camera (Video input) (On Cradle) ● 4×Trigger
CRD865 (TYPE-C)		CAB-865-BASIC CAB-BMW-BASIC/CAB-BMW-AVIN CAB-EX-BASIC	● VCC /IGN DC9-36V input* ● 1× RS232 ● 1× Camera (Video input) (On Cradle)
CRD865 (TYPE-D)		CAB-865-BASIC	● Input DC 12V/24V
CRD865 (TYPE-E)		CAB-OTG-BASIC CAB-EX-BASIC	● VCC /IGN DC9-36V input ● 3× USB-A (OTG) ● 1× USB-C (Charge) ● 1× RJ45(Ethernet) ● 1× RS232
CRD865 (TYPE-F)		CAB-HUB-BASIC CAB-EX-HUB CAB-BMW-BASIC/CAB-BMW-AVIN CAB-EX-BASIC	● VCC /IGN DC9-36V input* ● 2× USB-A (OTG) ● 1× USB-C (Charge) ● 1× RJ45(Ethernet) ● 1× RS232 ● 4× Camera (Video input) (With Camera Hub) ● 1× Camera (Video input) (On Cradle) ● 4×Trigger
CRD865-CAN		CAB-865-2RS232 CAB-EX-RS232 CAB-BMW-BASIC/CAB-BMW-AVIN CAB-EX-BASIC	● VCC /IGN DC9-36V input ● 2× USB-A (OTG) ● 1× USB-C (Charge) ● 1× RJ45(Ethernet) ● 2× RS232 ● 1× CAN bus ● 4× GPIO

Topicon HK Limited
2314-2316, Tower C, Huangdu Plaza, Yitian Road, Futian District, Shenzhen 518048, China

CRD865-CAN-RS485		CAB-865-2RS232 CAB-EX-RS232 CAB-BMW-BASIC/CAB-BMW-AVIN CAB-EX-BASIC	● VCC /IGN DC9-36V input ● 2× USB-A (OTG) ● 1× USB-C (Charge) ● 1× RJ45(Ethernet) ● 1× RS232 1× RS485 ● 1× CAN bus ● 4× GPIO
CRD865 M12		CAB-865-BASIC CAB-BMW-BASIC CAB-EX-BASIC M12 to RJ45 female adapter cable	● VCC /IGN DC9-36V input ● 2× USB-A (OTG) ● 1× USB-C (Charge) ● 1× M12 connector (Ethernet) ● 1× RS232
BKT865-IP		BKT865-BAS-02 (Waterproof connector)	● VCC /IGN DC9-36V input ● 1× RS232
BKT865-BMW		CAB-BMW-BASIC CAB-EX-BASIC	● VCC /IGN DC9-36V input ● 1× RS232
BKT865-BMW-AVIN		CAB-BMW-BASIC CAB-EX-BASIC	● VCC /IGN DC9-36V input* ● 1× RS232 ● 1× Video input
BKT865-OTG		CAB-EX-BASIC One USB-A OTG female connector on the cradle cable.	● VCC /IGN DC9-36V input* ● 1× RS232 ● 1× USB-A (OTG) ● 1× Video input
BKT865-LAN-01		CAB-LAN-01 CAB-BMW-BASIC/CAB-BMW-AVIN CAB-EX-BASIC M12 to RJ45 female adapter cable.	● VCC /IGN DC9-36V input* ● 1× USB-C (Charge) ● 1× M12 connector (Ethernet) ● 1× RS232 ● 1× Camera (Video input) (On Cradle)
BKT865-LAN-02		USB-C to C cable	● 1× USB-C (Charge) ● 1× RJ45(Ethernet)**(optional)** ● 1× 1D/2D Barcode Scanner

* Video input: input voltage 11-36 V, as the input must stay above 11 V to power the camera. All other input: 9-36 V.

Topicon HK Limited
2314-2316, Tower C, Huangdu Plaza, Yitian Road, Futian District, Shenzhen 518048, China

2.1.1 CRD865 Cradle

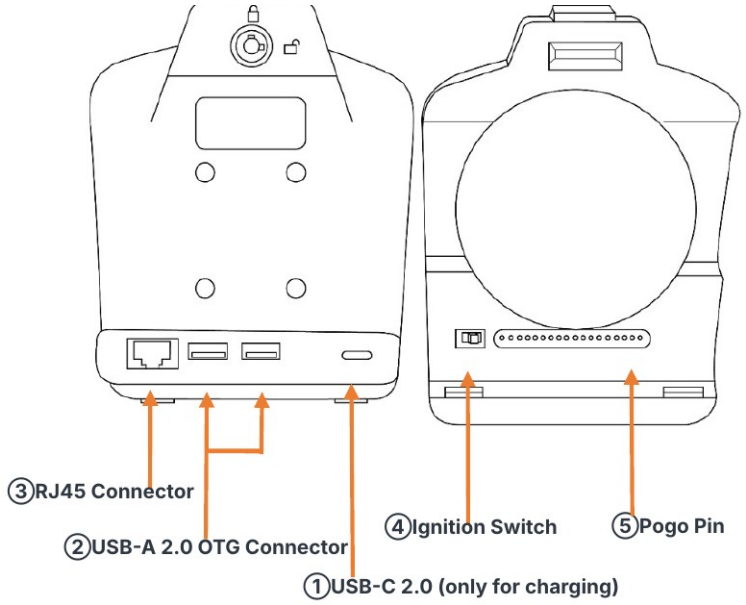

Full features cradle interface

Vehicle Input: DC9V to 36V, ignition control with optional switch in the cradle

① Fast-charging AC adapter or charge input 5V/3A, 9V/2A, 12V/2A with USB-C connector.
② USB-A 2.0 OTG Connector x 2
③ RJ45 connector used for Ethernet
④ Ignition switch: the ignition switch is switched to the right side, charging is independent of ignition ON/OFF. If ignition switch is switched to the left side, charging is dependent on ignition ON.

Full features cradle

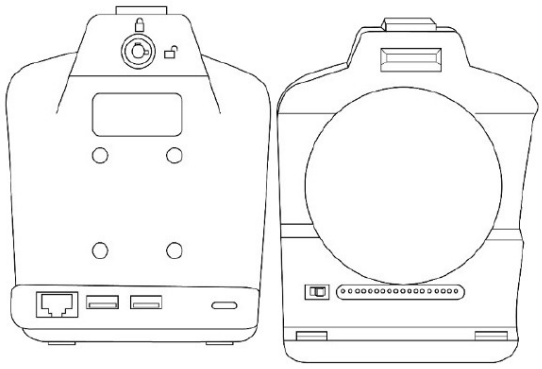

CRD865 Cradle/ CRD865-CAN

With RJ45, USB-A OTG (USB2.0) USB-C (For charging only)

Basic features cradle

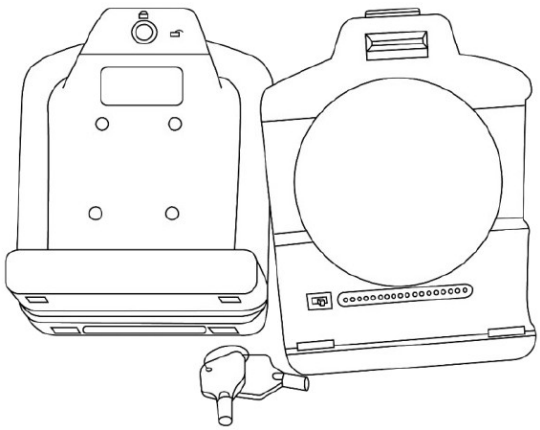

CRD865-BASIC Cradle

Without RJ45, USB-A OTG and USB-C charge function

Topicon HK Limited
2314-2316, Tower C, Huangdu Plaza, Yitian Road, Futian District, Shenzhen 518048, China

2.1.1.1 CRD865 cradle with GPIO and RS232/RS485 cables

It provides 4 GPIOs, 2 RS232s, 1 RS485 and 1 Video input.

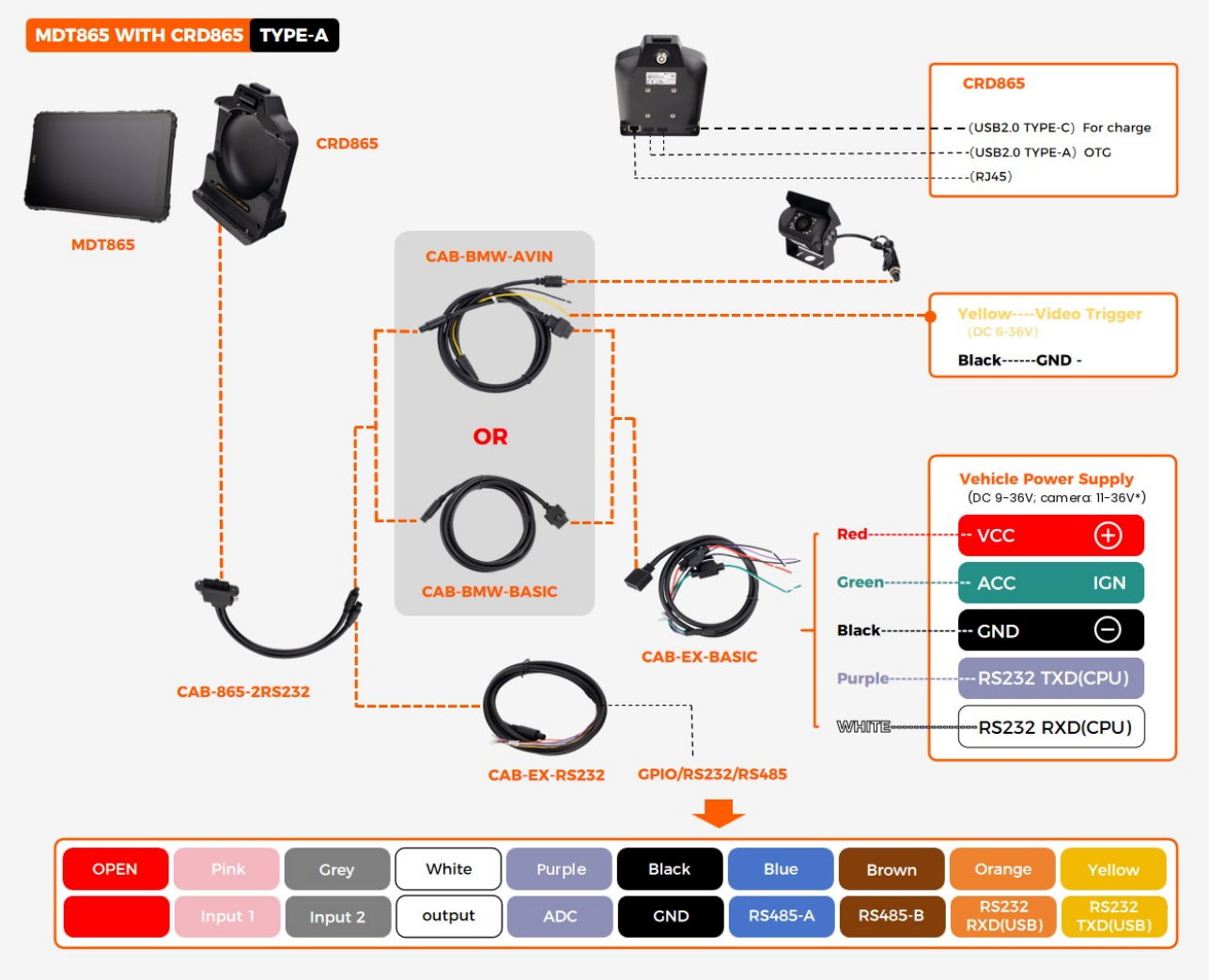

Topicon HK Limited
2314-2316, Tower C, Huangdu Plaza, Yitian Road, Futian District, Shenzhen 518048, China

2.1.1.2 CRD865 cradle with full features cable

It provides 2 × RS232, 1 × RS485, 4 × GPIO and 1–4 video inputs.
Connecting to a camera hub can provide four video inputs.

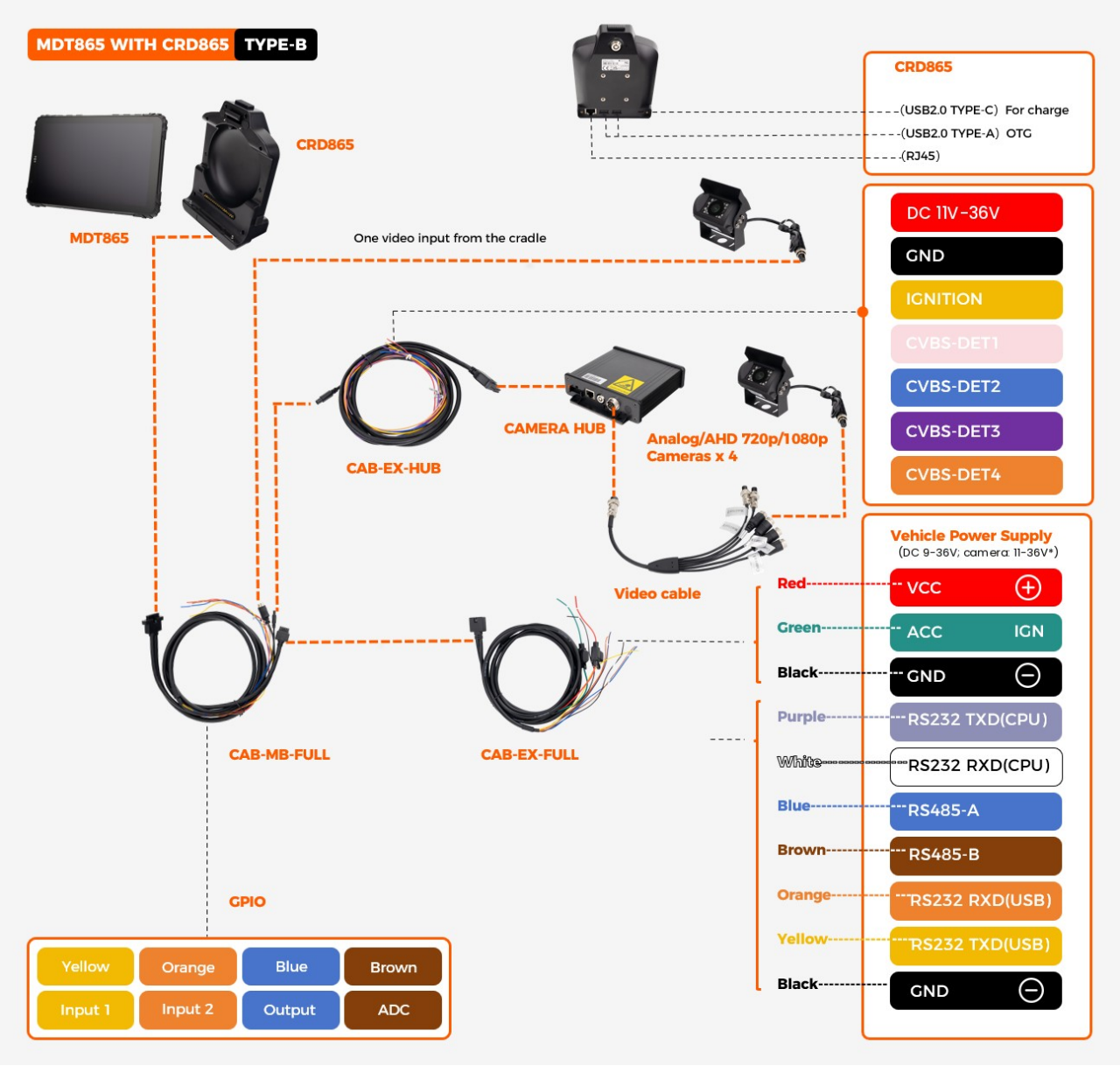

Topicon HK Limited
2314-2316, Tower C, Huangdu Plaza, Yitian Road, Futian District, Shenzhen 518048, China

2.1.1.3 CRD865-BAS cradle with BMW basic cables

It provides 1 RS232(CPU) and 1 Video input.

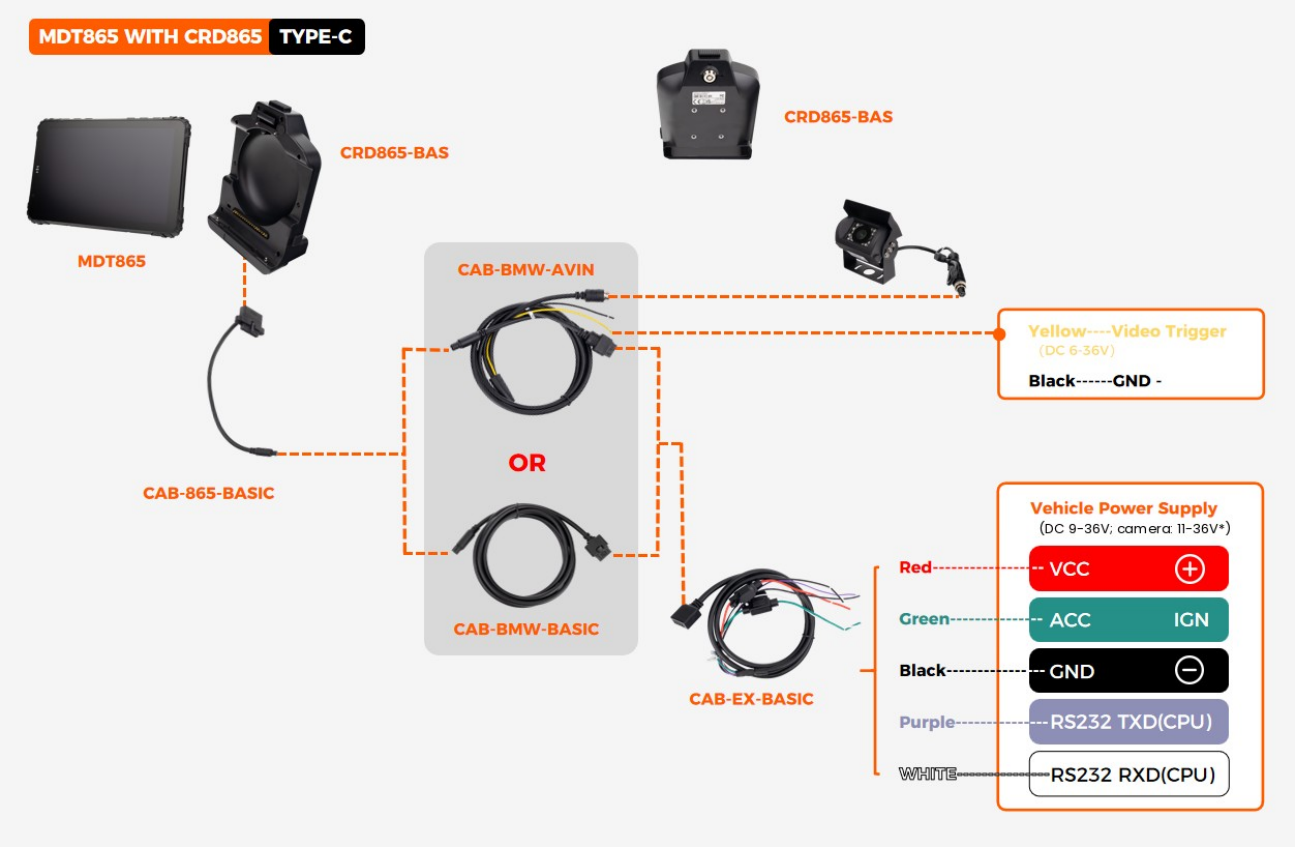

2.1.1.4 CRD865-BAS cradle with BMW-Connector Car Charger



Topicon HK Limited
2314-2316, Tower C, Huangdu Plaza, Yitian Road, Futian District, Shenzhen 518048, China

2.1.1.5 CRD865 / CRD865-BAS cradle with USB-A OTG cables

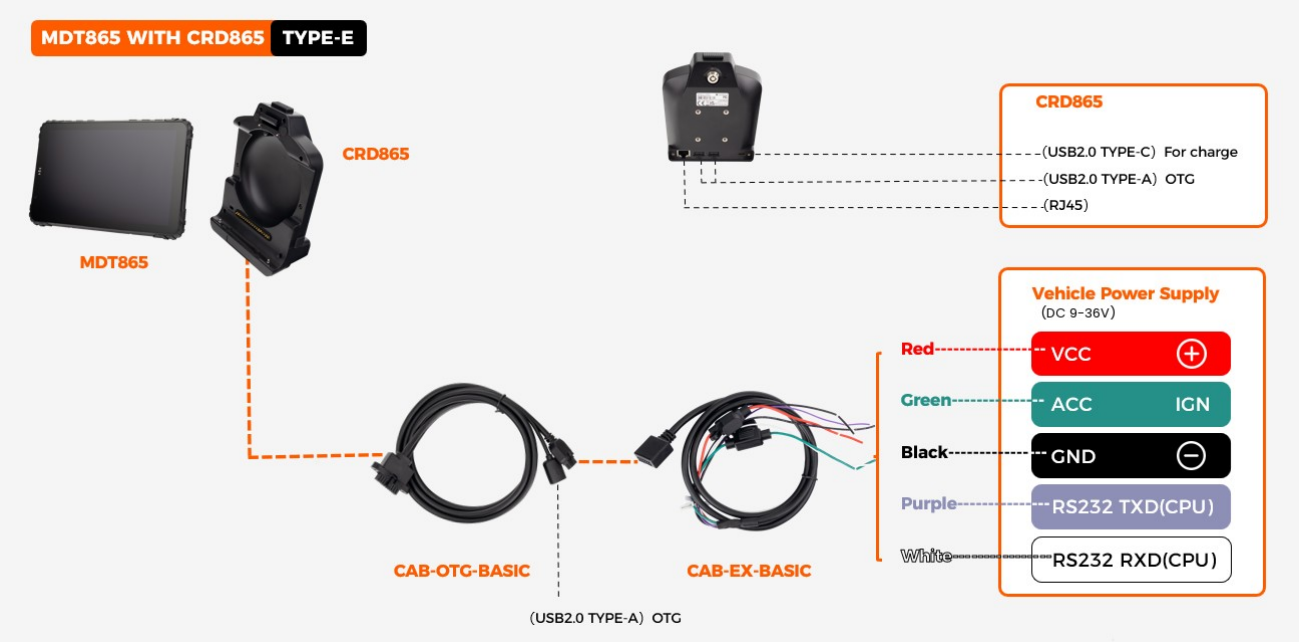

It provides 1 RS232 and 1 USB-A OTG (USB 2.0)

Topicon HK Limited
2314-2316, Tower C, Huangdu Plaza, Yitian Road, Futian District, Shenzhen 518048, China

2.1.1.6 CRD865 cradle with Camera Hub cable (CAB-HUB-BASIC)

It provides 1 × RS232 and 1–5 video inputs.

Connecting to a camera hub can provide four video inputs and 4 triggers.

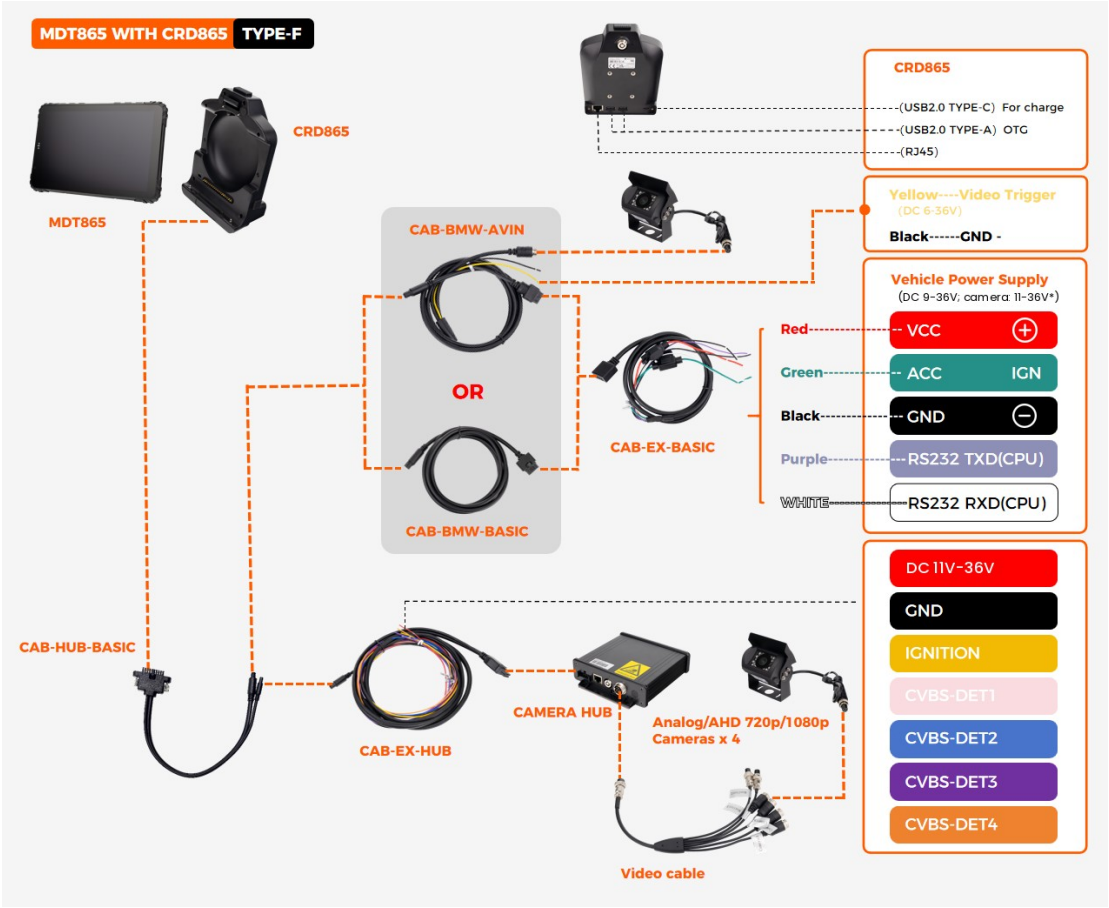

Topicon HK Limited
2314-2316, Tower C, Huangdu Plaza, Yitian Road, Futian District, Shenzhen 518048, China

2.1.1.7 CRD865-CAN cradle with CAB-865-2RS232 Cable

It can provide 2 RS232, 1 CAN bus, 4 GPIO and 1 Video input.

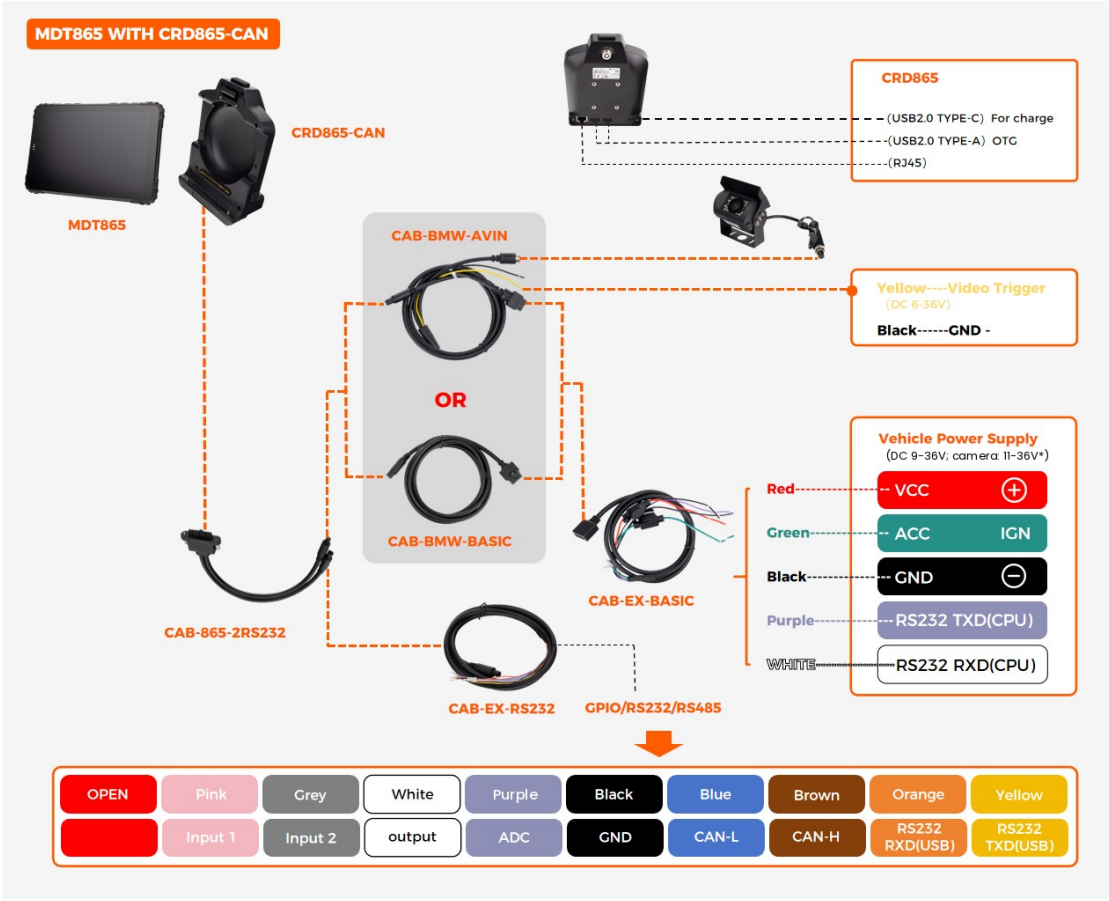

Topicon HK Limited
2314-2316, Tower C, Huangdu Plaza, Yitian Road, Futian District, Shenzhen 518048, China

2.1.1.8 CRD865-CAN-RS485 cradle with CAB-865-2RS232 Cable

It can provide 1 RS232, 1 RS485, 1 CAN bus, 4 GPIO and 1 Video input.

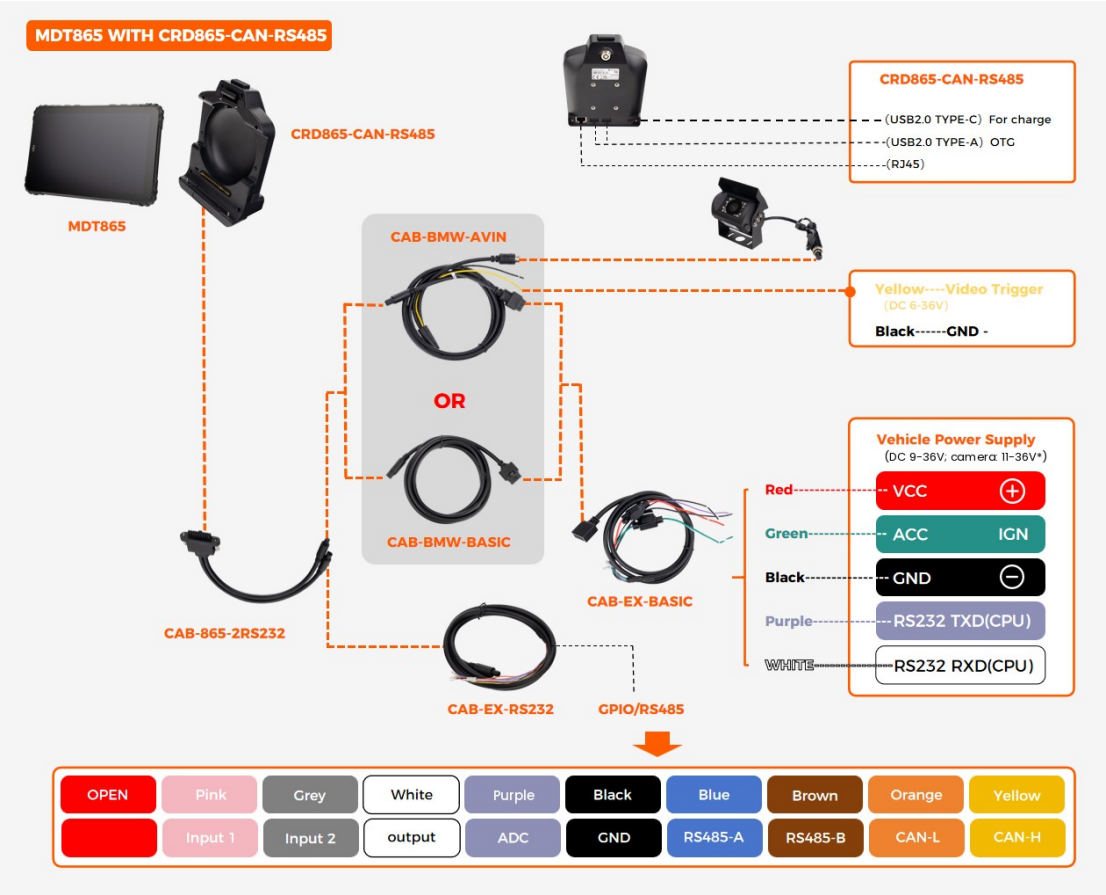

Topicon HK Limited
2314-2316, Tower C, Huangdu Plaza, Yitian Road, Futian District, Shenzhen 518048, China

2.1.1.9 CRD865-M12 cradle with BMW basic cables

M12 connector for Ethernet
It provides one RS232(CPU)

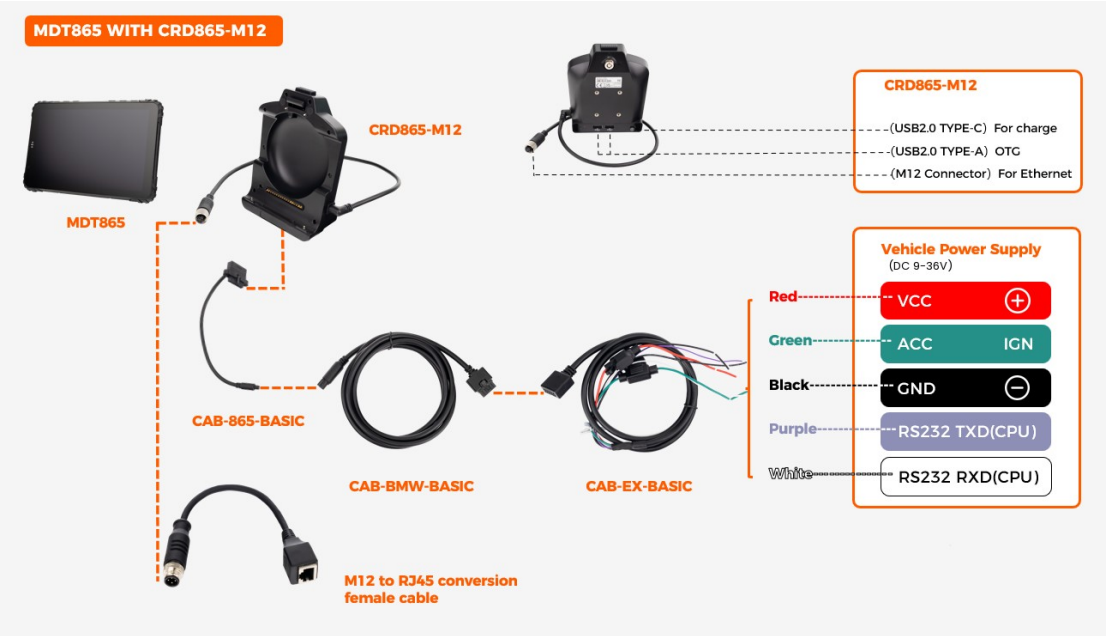

Topicon HK Limited
2314-2316, Tower C, Huangdu Plaza, Yitian Road, Futian District, Shenzhen 518048, China

2.1.2 BKT865 Metal Bracket

2.1.2.1 BKT865-IP with waterproof cables

If you require waterproofing, you can use the BKT865-IP cradle.
It provides one RS232.

◆ **Note: The bracket has no ignition control switch.**

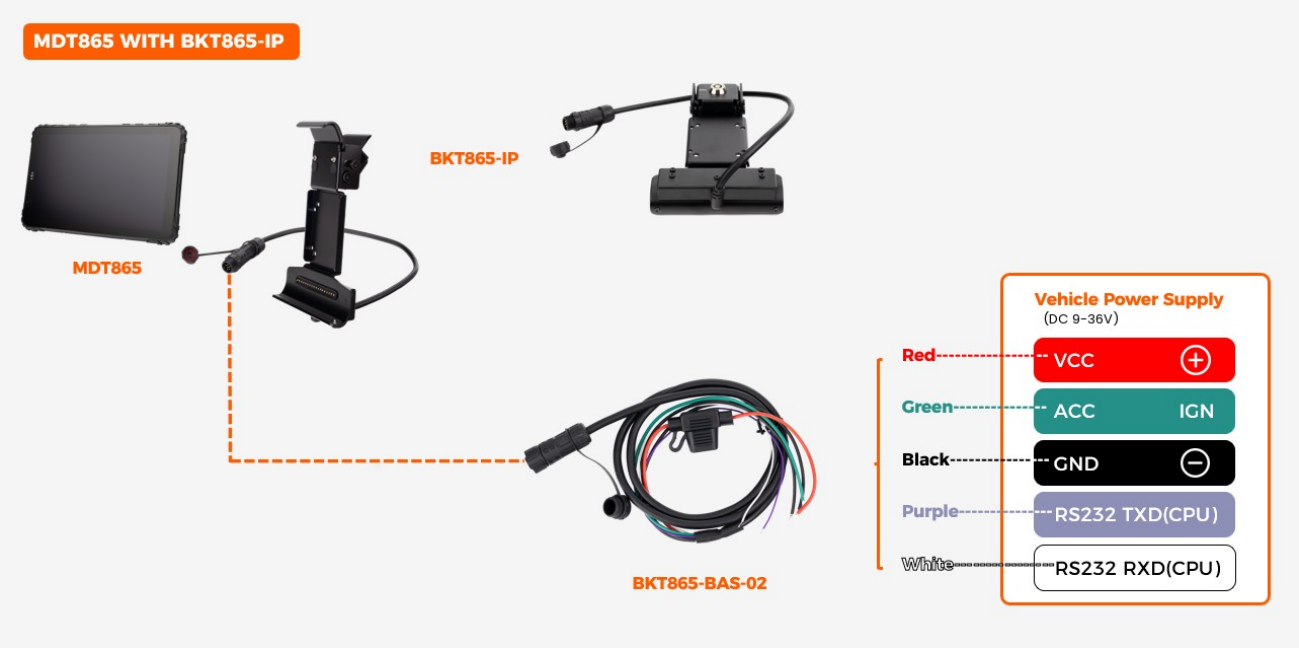

2.1.2.2 BKT865-BMW with BMW basic cables

It provides one RS232.

◆ **Note: The bracket has no ignition control switch.**



Topicon HK Limited
2314-2316, Tower C, Huangdu Plaza, Yitian Road, Futian District, Shenzhen 518048, China

2.1.2.3 BKT865-BMW with AVIN cables

It provides VCC, 1 RS232 and 1 Video input.

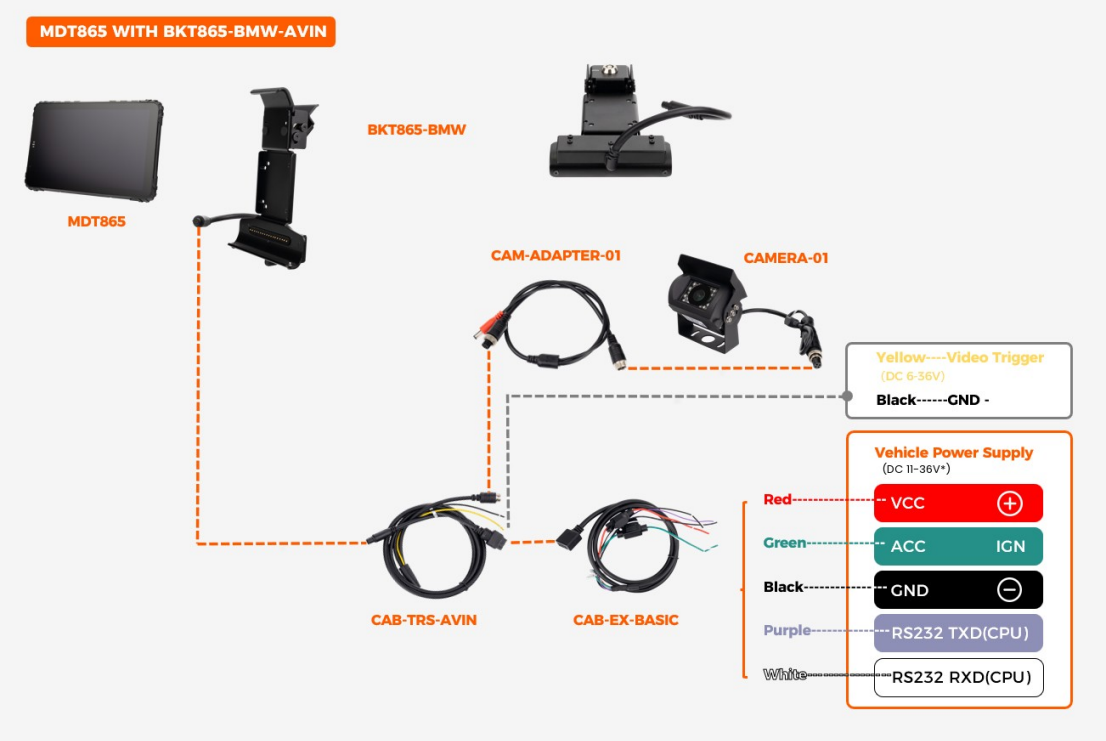

2.1.2.4 BKT865-OTG with USB-A OTG cable

It provides 1 RS232, 1 USB-A OTG (USB 2.0), and 1 Video input.

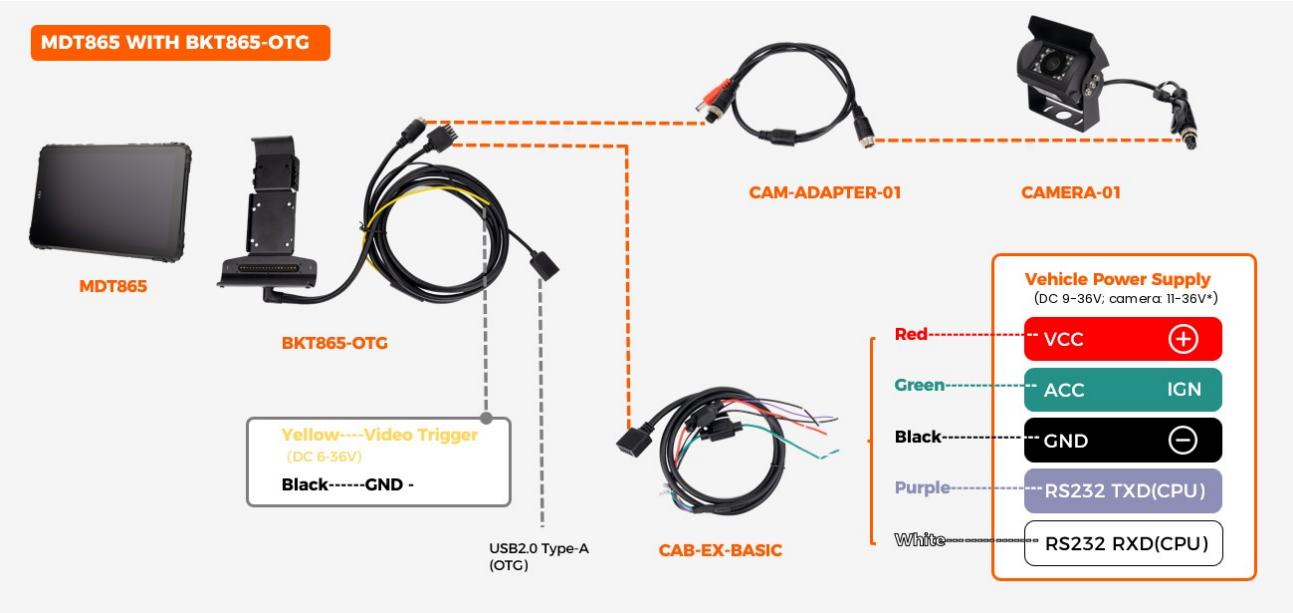

Topicon HK Limited
2314-2316, Tower C, Huangdu Plaza, Yitian Road, Futian District, Shenzhen 518048, China

2.1.3 BKT865-LAN Metal Bracket

◆ There is an ignition control switch inside the bracket.

Ignition switch: the ignition switch is switched to the right side, charging is independent of ignition ON/OFF. If ignition switch is switched to the left side, charging is depends on ignition ON.

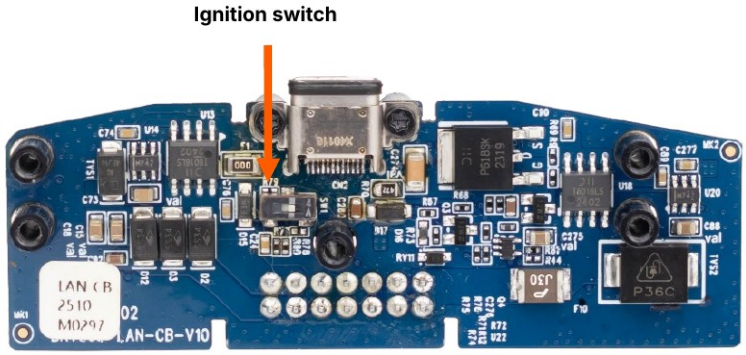

2.1.3.1 BKT865-LAN-01 with M12 cable

M12 connector for Ethernet
It provides 1 RS232(CPU) and 1 Video input.

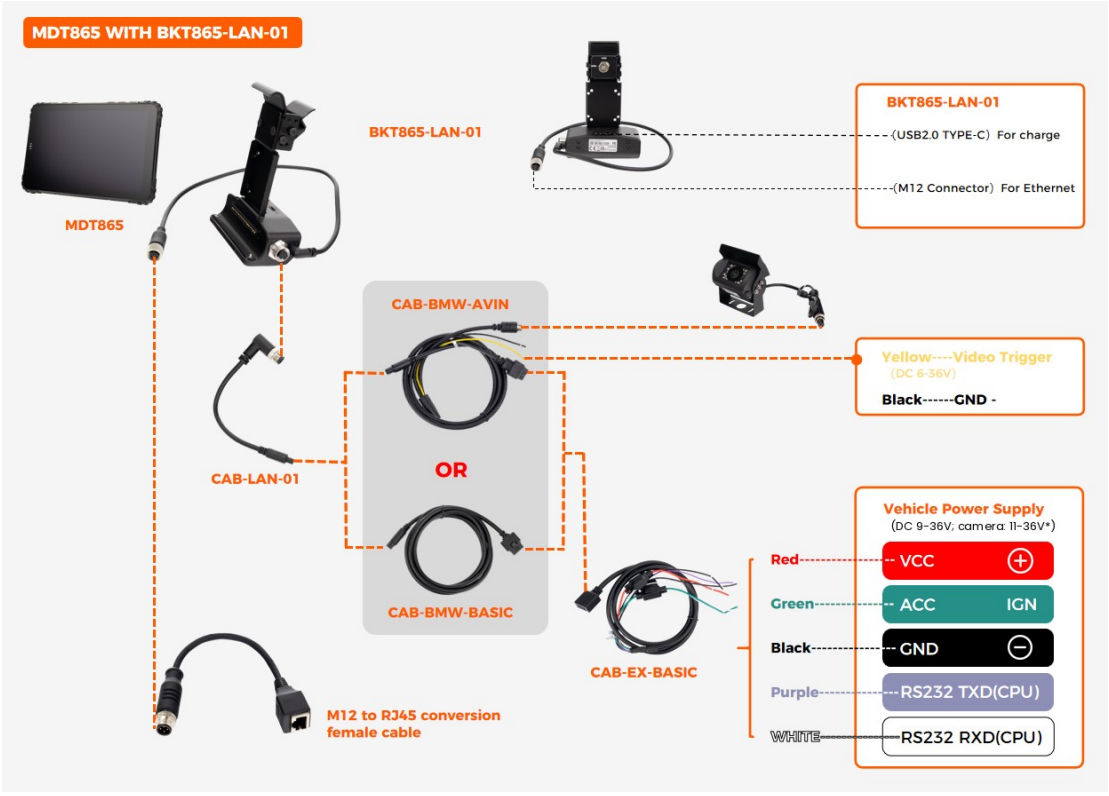

Topicon HK Limited
2314-2316, Tower C, Huangdu Plaza, Yitian Road, Futian District, Shenzhen 518048, China

2.1.3.2 BKT865-LAN-02 with Barcode Scanner

There is a 1D/2D Barcode Scanner on the cradle.
M12 connector for Ethernet (**optional**)

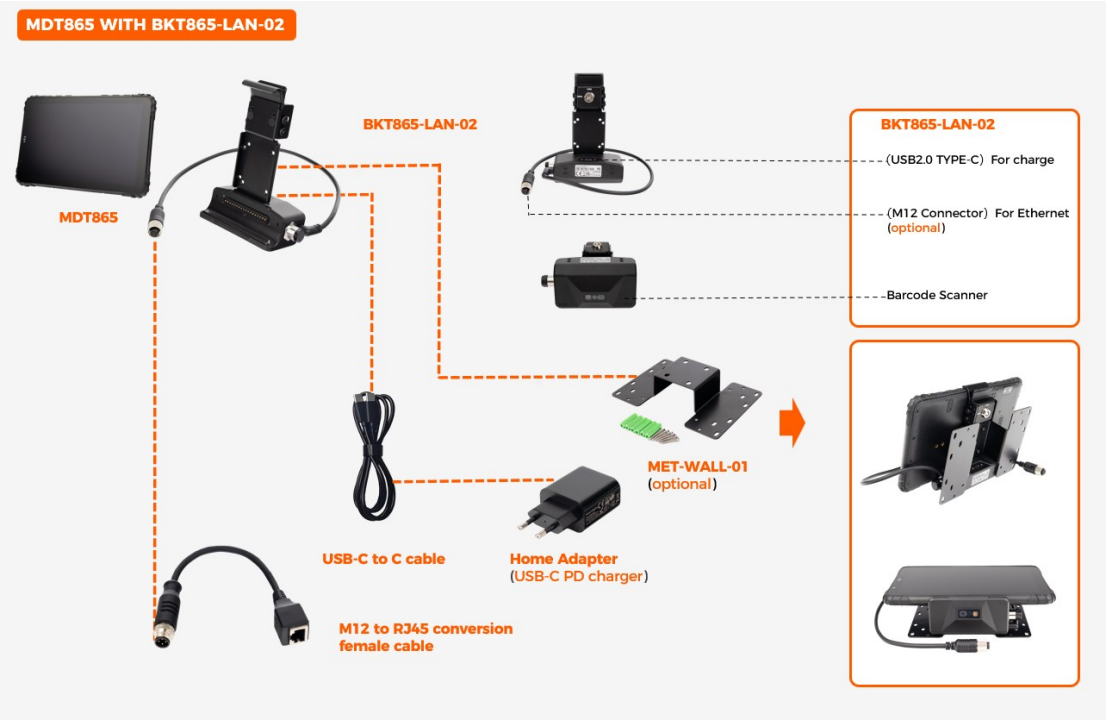

Topicon HK Limited
2314-2316, Tower C, Huangdu Plaza, Yitian Road, Futian District, Shenzhen 518048, China

2.2 Cradle Cable Pin Assignment Overview

* Video input: input voltage 11-36 V, as the input must stay above 11 V to power the camera. All other input: 9-36 V.

2.2.1 CAB-865-2RS232

Cradle cable with GPIO, RS232 and RS485

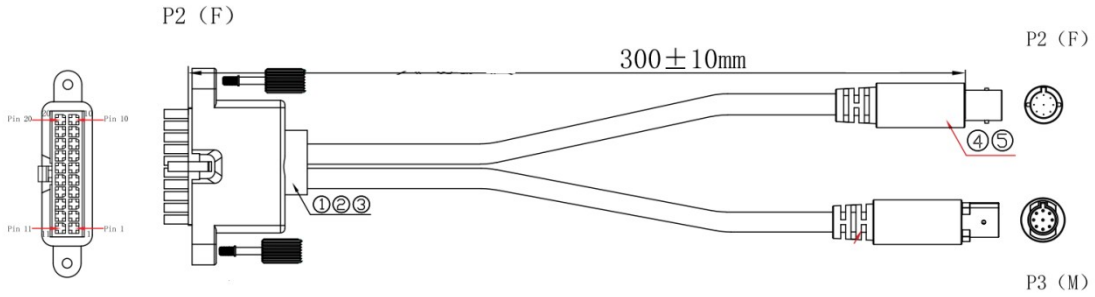

No	Item	Definition				
P1	20pin connector	Connect to the CRD865 full feature cradle				
P2	9pin BMW Connector (Female)	Connect to the extension cable (CAB-BMW-BASIC + CAB-EX-BASIC)				
		Pin 1	Pin 2	Pin 3	Pin 4	Pin 5
		VCC 9-36V input*	IGN	Video Trigger	Video input	RXD (CPU)
		Pin 6	Pin 7	Pin 8	Pin 9	
		TXD (CPU)	Shield	GND	Camera DC12V output	
P3	9pin BMW Connector (Male)	Connect to the GPIO/RS232/RS485 cable (CAB-EX-RS232)				
		Pin 1	Pin 2	Pin 3	Pin 4	Pin 5
		GPIO-1 (Input 1)	GPIO-3(Output)	RS485-A / CAN-L	RXD(USB)	GND
		Pin 6	Pin 7	Pin 8	Pin 9	
		GPIO-2 (Input 2)	GPIO-4 (ADC)	RS485-B / CAN-H	TXD(USB)	

Topicon HK Limited
2314-2316, Tower C, Huangdu Plaza, Yitian Road, Futian District, Shenzhen 518048, China

2.2.2 CAB-EX-RS232

GPIO, RS232 and RS485 or CAN bus

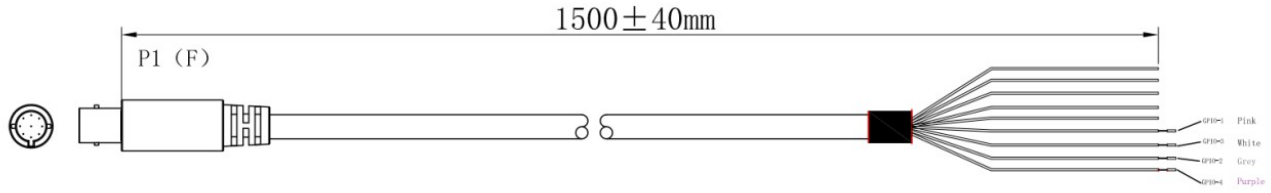

No	Item	Definition				
P1	9pin BMW Connector (Female)	Connect to your GPIO, RS232 and RS485 or CAN bus devices.				
		Pink	White	Blue	Orange	Black
		GPIO-1 (Input 1)	GPIO-3 (Output)	RS485-A / CAN-L	RXD(USB)	GND
		Grey	Purple	Brown	Yellow	
		GPIO-2 (Input 2)	GPIO-4 (ADC)	RS485-B / CAN-H	TXD(USB)	

2.2.3 CAB-HUB-BASIC

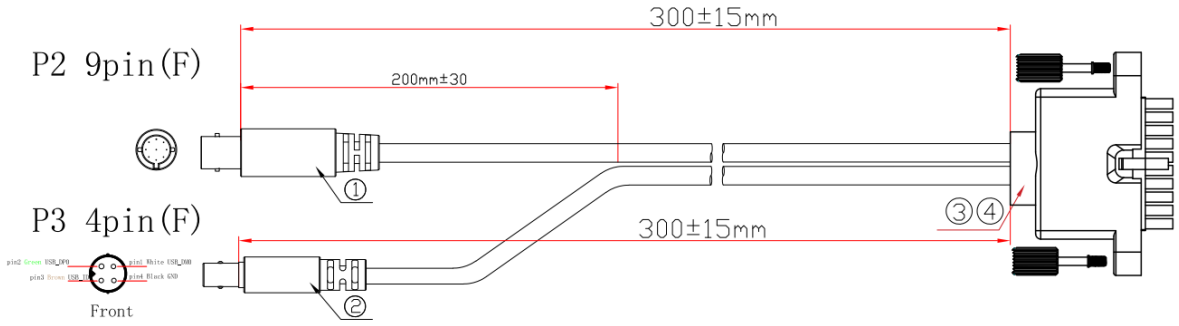

No	Item	Definition				
P1	20pin connector	Connect to the CRD865 full feature cradle				
P2	9pin BMW Connector (Female)	Connect to the extension cable (CAB-BMW-BASIC + CAB-EX-BASIC)				
		Pin 1	Pin 2	Pin 3	Pin 4	Pin 5
		VCC 9-36V input*	IGN	Video Trigger	Video input	RXD (CPU)
		Pin 6	Pin 7	Pin 8	Pin 9	
		TXD (CPU)	Shield	GND	Camera DC12V output	
P3	4pin BMW Connector (Female)	Connect to the camera hub extension cable (CAB-EX-HUB)				
		Pin 1	Pin 2	Pin 3	Pin 4	
		D-	D+	Detect USB-ID	GND	

Topicon HK Limited
2314-2316, Tower C, Huangdu Plaza, Yitian Road, Futian District, Shenzhen 518048, China

2.2.4 CAB-BMW-BASIC

Basic features Cradle cable

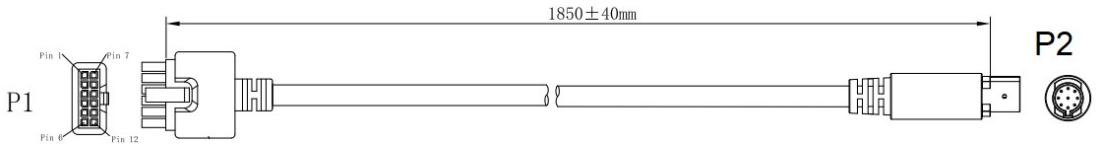

No	Item	Definition						
P1	Power Connector	Pin 2	Pin 3	Pin 6	Pin 9	Pin 10	Pin 11	
		GND	RXD	IGN	Shield	TXD	VCC 9-36V input	
P2	9 pin BMW Connector M	Pin 1		Pin 2	Pin 5	Pin 6	Pin 7	Pin 8
		VCC 9-36V input		IGN	RXD	TXD	Shield	GND

Topicon HK Limited
2314-2316, Tower C, Huangdu Plaza, Yitian Road, Futian District, Shenzhen 518048, China

2.2.5 CAB-MB-FULL

Full features Cradle cable

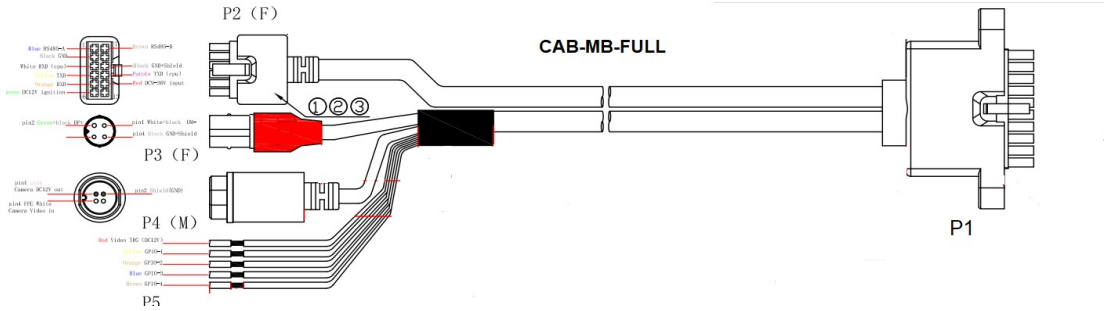

<table>
<tr><th>No</th><th>Item</th><th colspan="6">Definition</th></tr>
<tr><td>P1</td><td>20pin Micro-Fit connector</td><td colspan="6">Connect to the full feature cradle</td></tr>
<tr><td rowspan="4">P2</td><td rowspan="4">12pin Micro-Fit connector</td><td colspan="6">Connect to the extension cable (CAB-EX-FULL)</td></tr>
<tr><td>Pin 1</td><td>Pin 2</td><td>Pin 3</td><td>Pin 4</td><td colspan="2">Pin 5</td></tr>
<tr><td>RS485-A</td><td>GND</td><td>RS232 RXD (CPU)</td><td>RS232 TXD (USB)</td><td colspan="2">RS232 RXD (USB)</td></tr>
<tr><td>Pin 6</td><td>Pin 7</td><td>Pin 9</td><td>Pin 10</td><td colspan="2">Pin 11</td></tr>
<tr><td>IGN</td><td>RS485-B</td><td>GND</td><td>RS232 TXD (CPU)</td><td colspan="2">VCC 9-36V input*</td></tr>
<tr><td rowspan="3">P3</td><td rowspan="3">4pin BMW Connector F</td><td colspan="6">Connect to the 4pin BMW connector on the camera hub cable (CAB-EX-HUB)</td></tr>
<tr><td colspan="2">Pin 1</td><td>Pin 2</td><td colspan="2">Pin 4</td></tr>
<tr><td colspan="2">DM-</td><td>DP+</td><td colspan="2">GND</td></tr>
<tr><td rowspan="3">P4</td><td rowspan="3">4 pin Circular Connector M</td><td colspan="6">Connect to the camera (Support Analog, AHD720P, AHD1080P camera)</td></tr>
<tr><td colspan="2">Pin 1</td><td>Pin 2</td><td colspan="2">Pin 4</td></tr>
<tr><td colspan="2">DC12V output</td><td>GND</td><td colspan="2">Camera video input</td></tr>
<tr><td rowspan="3">P5</td><td rowspan="3">GPIO Wires</td><td>GPIO-1 (Yellow)</td><td>GPIO-2 (Orange)</td><td>GPIO-3 (Blue)</td><td>GPIO-4 (Brown)</td><td>Red wire</td></tr>
<tr><td>Input 1</td><td>Input 2</td><td>output</td><td>ADC</td><td>Video Trigger</td></tr>
<tr><td colspan="2">Input 3-32V=High
Input 0-2V=Low</td><td>Output the voltage from the Tablet. 200mA current.</td><td>Analog Digital Converter.
Read the Input voltage.</td><td></td></tr>
</table>

Topicon HK Limited
2314-2316, Tower C, Huangdu Plaza, Yitian Road, Futian District, Shenzhen 518048, China

2.2.6 CAB-EX-FULL

Cradle extension cable

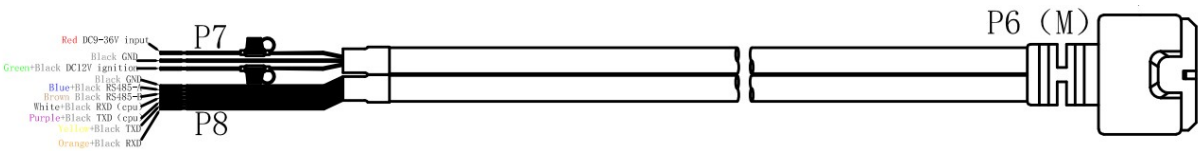

No	Item	Definition						
P6	12pin Micro-Fit connector	Connect to the P2 connector on the cradle cable (CAB-MB-FULL)						
P7	Power Supply wires	Connect to the vehicle' battery.						
		Red		Green		Black		
		VCC9-36V input		IGN		GND		
P8	Serial port wires	1 x RS485, 2 x RS232 (White/Purple RS232 same as model MDT1065/MDT880 serial port)						
		Blue	Brown	Yellow	Orange	White	Purple	Black
		RS485-A	RS485-B	TXD(USB)	RXD(USB)	RXD(CPU)	TXD(CPU)	GND

Topicon HK Limited
2314-2316, Tower C, Huangdu Plaza, Yitian Road, Futian District, Shenzhen 518048, China

2.2.7 CAB-EX-HUB

Camera hub cable

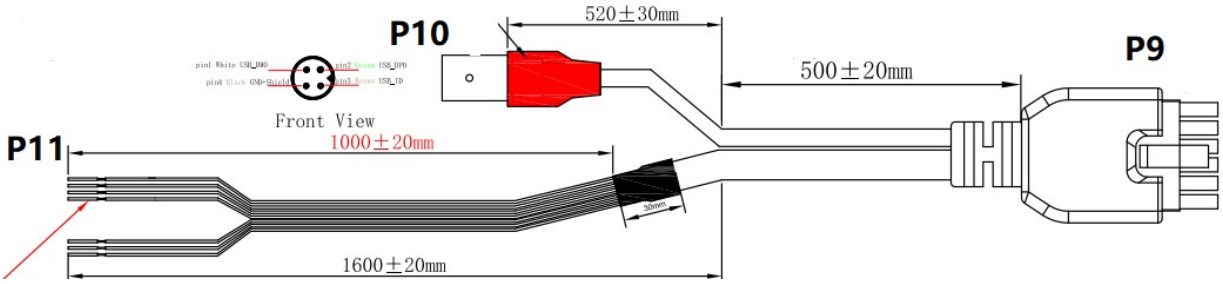

No	Item	Definition						
P9	12pin Micro-Fit connector	Connect to the Camera Hub HH420/HH421.						
P10	4pin BMW Connector M	Connect to the 4pin BMW connector on the full feature cradle cable (CAB-MB-FULL).						
		Pin 1	Pin 2	Pin 3	Pin 4			
		DM-	DP+	ID	GND			
P11	Trigger wires	4 channels trigger for camera.						
		Pink	Blue	Purple	Orange	Black	Yellow	Red
		CVBS_DET1	CVBS_DET2	CVBS_DET3	CVBS_DET4	GND	IGN	VCC 9-36V input*

Topicon HK Limited
2314-2316, Tower C, Huangdu Plaza, Yitian Road, Futian District, Shenzhen 518048, China

2.2.8 CAB-OTG-BASIC

Basic features Cradle cable

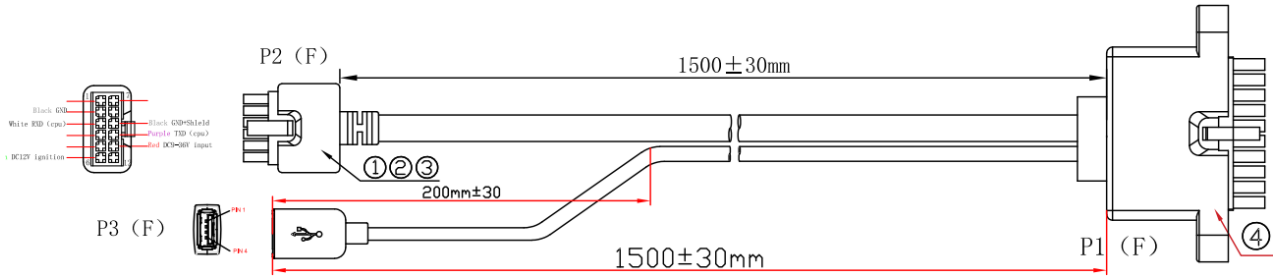

No	Item	Definition							
P1	Cradle Connector	Pin 3	Pin 8	Pin 9	Pin 10	Pin 13	Pin 18	Pin 19	Pin 20
		IGN	RXD	GND	D+	VCC 9-36V input	TXD	VBUS 5V	D-
P2	Power Connector	Pin 2	Pin 3	Pin 6	Pin 9	Pin 10	Pin 11		
		GND	RXD	IGN	GND	TXD	VCC 9-36V input		
P3	USB	USB Type-A (cannot be used simultaneously with USB Type-C on the device)							

2.2.9 CAB-EX-BASIC

Basic features Cradle extension cable

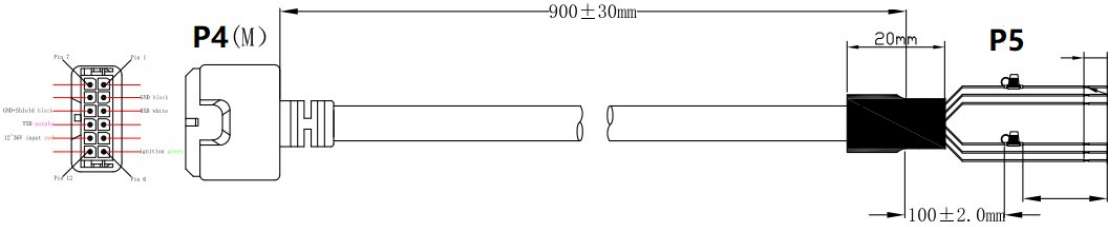

No	Item	Definition				
P4	12pin Micro-Fit connector	Connect to the basic features cradle cable P2 connector.				
P5	Power Supply and Serial port wires	It can be connected to the vehicle' battery.				
		Red	Green	Black	White	Purple
		VCC 9-36V input	IGN	GND	RXD	TXD

◆ **Note: These two basic feature cables can also be used for a full features cradle.**

Topicon HK Limited
2314-2316, Tower C, Huangdu Plaza, Yitian Road, Futian District, Shenzhen 518048, China

2.2.10 CAB-865-BASIC

L-Shape cradle cable

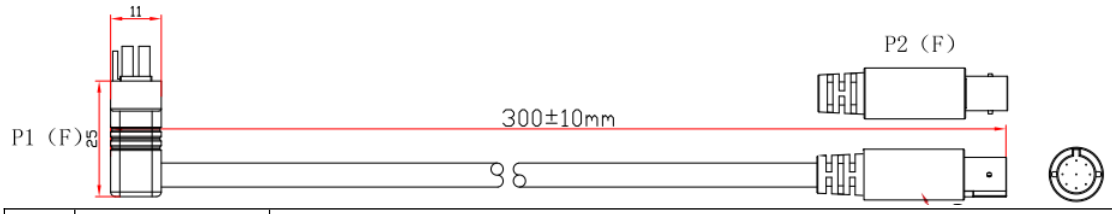

No	Item	Definition					
P1	Cradle Connector	Pin 1	Pin 2	Pin 3	Pin 8	Pin 9	Pin 11
		Shield	Video Trigger	IGN	RXD	GND	Video input
		Pin 12		Pin 13	Pin 18		
		Camera DC12V output		VCC 9-36V input*	TXD		
P2	9 pin BMW Connector F	Pin 1		Pin 2	Pin 3		Pin 4
		VCC 9-36V input*		IGN	Video Trigger		Video input
		Pin 5	Pin 6	Pin 7	Pin 8	Pin 9	
		RXD	TXD	Shield	GND	Camera DC12V output	

Topicon HK Limited
2314-2316, Tower C, Huangdu Plaza, Yitian Road, Futian District, Shenzhen 518048, China

2.2.11 CAB-EX-2M/ CAB-EX-5M

Molex to Molex 2meter and 5meter extension cables

CAB-EX-2M

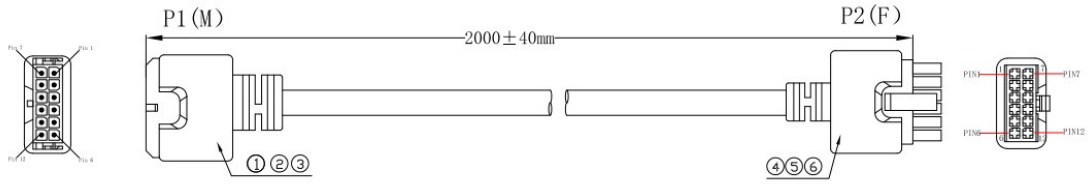

CAB-EX-5M

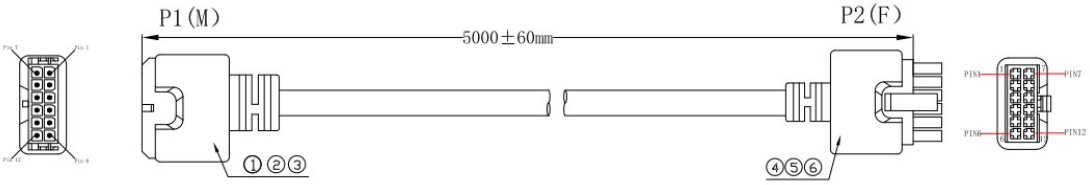

No	Item	Definition							
P1	12pin Molex Male	Pin 2	Pin 3	Pin 4	Pin 5	Pin 6	Pin 9	Pin 10	Pin 11
		GND	RXD (CPU)	TXD (USB)	RXD (USB)	IGN	Shield	TXD (CPU)	VCC DC9-36V input
P2	12pin Molex Female	Pin 2	Pin 3	Pin 4	Pin 5	Pin 6	Pin 9	Pin 10	Pin 11
		GND	RXD (CPU)	TXD (USB)	RXD (USB)	IGN	Shield	TXD (CPU)	VCC DC9-36V input

Topicon HK Limited
2314-2316, Tower C, Huangdu Plaza, Yitian Road, Futian District, Shenzhen 518048, China

2.2.12 BKT865-BAS-01

Basic feature cable with waterproof connector

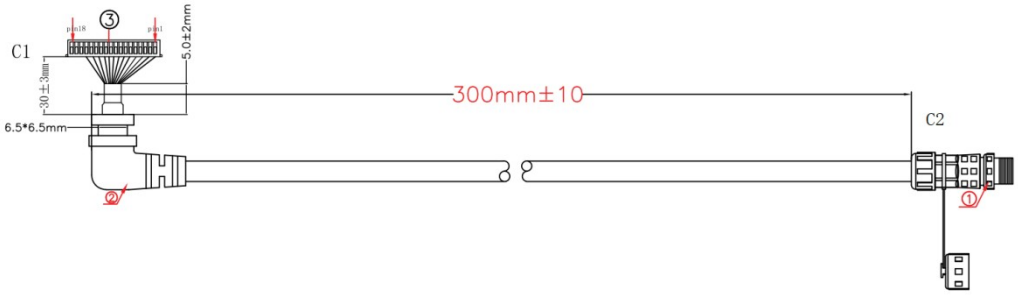

No	Item	Definition					
C1	Housing 18pin	Pin 6	Pin 7	Pin 10	Pin 12	Pin 17	Pin 18
		TXD	RXD	IGN	VCC input 9-36V	GND	GND
C2	6pin Waterproof Connector M	Pin 1	Pin 2	Pin 3	Pin 4	Pin 5	Pin 6
		GND	TXD	GND	RXD	IGN	VCC

2.2.13 BKT865-BAS-02

Basic feature cable with waterproof connector for MDT865

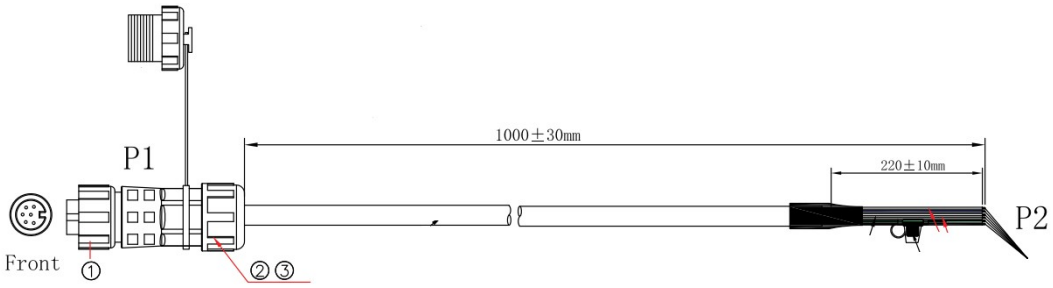

No	Item	Definition					
P1	6pin Waterproof Connector F	Pin 1	Pin 2	Pin 3	Pin 4	Pin 5	Pin 6
		GND	TXD	GND	RXD	IGN	VCC
P2	Wires	Black	Purple	Black	White	Green	Red
		GND	TXD	GND	RXD	IGN	VCC

Topicon HK Limited
2314-2316, Tower C, Huangdu Plaza, Yitian Road, Futian District, Shenzhen 518048, China

2.2.14 BKT865-BAS-BMW

BMW cable for MDT865

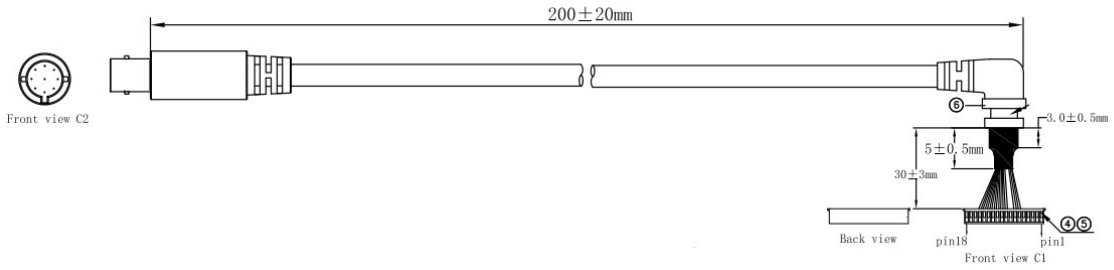

No	Item	Definition			
C1	Housing 18pin	Pin 7	Pin 9	Pin 10	Pin 11
		VCC input 9-36V*	IGN	Camera TRG	Camera input
		Pin 12	Pin 13	Pin 14	Pin 15
		RXD	TXD	Shield	GND
C2	BMW Connector M	Pin 1	Pin 2	Pin 3	Pin 4
		VCC input 9-36V*	IGN	Camera TRG	Camera input
		Pin 5	Pin 6	Pin 7	Pin 8
		RXD	TXD	Shield	GND

2.3 Accessories

2.3.1 Cradles



CRD865

Full feature cradle (Ethernet, OTGx2)

CRD865-BAS

Basic feature cradle

Topicon HK Limited
2314-2316, Tower C, Huangdu Plaza, Yitian Road, Futian District, Shenzhen 518048, China



CRD865-CAN

Full feature cradle (Ethernet, OTGx2)



CRD865-M12

Full feature cradle (Ethernet with M12 cable, OTGx2)



BKT865-BMW

with BMW connector



BKT865-IP

with waterproof connector



BKT865-LAN-01

with M12 cable (for ethernet) and another M12 connector (for Vcc, IGN, GND and RS232)



BKT865-LAN-02

metal bracket with 1D/2D barcode at the bottom

These two metal brackets support only vehicle charging (9–36 V input), IGN, GND and 1 × RS232.

Topicon HK Limited
2314-2316, Tower C, Huangdu Plaza, Yitian Road, Futian District, Shenzhen 518048, China

2.3.2 Expansion Modules



- **Barcode Scanner:** MOD-BAR-01
  (SE4107 barcode module)
- **LoRa Module:**
  LoRa-E220
  (Frequency Range: 850.125~930.125MHz)
  Support multiple transmission methods

  MOD-LORA-01
  (For temperature sensor)
- **Pressure sensor:** MOD-PRE-01
  (Air pressure sensor)
- **RS232 module:** MOD-RS232-01
- **RFID LF Reader:** MOD-LF-01
  (support 125kHz/134.2kHz)

2.3.3 Chargers



ADA-HOME-01
(PD quick charge home adapter)



ADA-CAR-01
Car charger



CAR-865-BMW



ADA-HOME-02
(Quick charge home adapter with optional plug)



with US plug



with AU plug



with EU plug



with UK plug

Topicon HK Limited
2314-2316, Tower C, Huangdu Plaza, Yitian Road, Futian District, Shenzhen 518048, China

2.3.4 USB Fingerprint Reader



(Connect to the dock)

2.3.5 Other Accessories



RAM-ROUND-2
(2 x round plate, 6cm arm)



RAM-ROUND-3
(2 x round plate, 9cm arm)



RAM-SUC-01
(1 x round plate, 6cm arm, suction cup)



MET-WALL-00
wall mount plate



EXT-GPS-01
external GPS antenna (with L-shape cable)



EXT-GPS-02
conversion cable
(MMCX to SMA female)



CAP-865-01
Sunshield cap locks onto the tablet and blocks sunlight.



CASE-865-01
Ultra protection case (not compatible with sunshield and module)

Topicon HK Limited
2314-2316, Tower C, Huangdu Plaza, Yitian Road, Futian District, Shenzhen 518048, China



STR-HAND-01
Hand strap



Bottom metal plate



7H glass screen protector (glare)



STY-865-01
Stylus pen with holder



ACC-WALKIE-01
Walkie talkie



SCREW-01
Screw driver for SIM card cover



BAG-01
Carry bags



BAG-02

Topicon HK Limited
2314-2316, Tower C, Huangdu Plaza, Yitian Road, Futian District, Shenzhen 518048, China

Chapter 3: Getting Started

3.1 Power On/Off and Sleep/Wake

This chapter describes how to power the device on and off, put the device into sleep mode (screen saver) and force restart. Proper operation of power on/off the device will be beneficial to ensure the stability of the system. The device status indicated by the color of the indicator is as described in the following table for the standard.

Table 3.1.1 Indicator color and device status table

LEDs Behavior	Device Status
Red light on	Charging
Green light on	Fully charged
Light off	High temperature causes stop charging.
Red light on	High temperature causes shutdown.
Red or Green light blinking	Notification (Sleep when charging)

1. Power on the Device

a. Power on by pressing the power button: Press and hold the power button for more than 2 seconds until the boot screen appears. It needs around 20 seconds to start the system.
b. Power consumption during operation: 15 W (typical).

2. Power off the Device

a. Power off by pressing the button: In the status of working on the device desktop, long press the power button for more than 2 seconds until the shutdown prompt pop-up then click the “Power off” option.
b. Power consumption when powered off (docked): approx. 250 mW.

3. Sleep and Wake the Device

a. Auto sleep, the sleep time can be set up in the settings.
b. Short press button to sleep.
c. Short press to wake.
d. Wake up by ignition ON.

4. Restart the device

Restart by pressing the button: In the status of working on the device desktop, long press the power button for more than 2 seconds until the prompt pop-up then click the “Restart” option.

Topicon HK Limited
2314-2316, Tower C, Huangdu Plaza, Yitian Road, Futian District, Shenzhen 518048, China

3.2 Installing Micro SD and SIM Card

To install the Micro SD card and/or Nano SIM card.
a. Find the Nano SIM card slot and the Micro SD card slot. The following illustration shows the correct card orientation.
b. To make removal easier, attach a piece of tape to the card as shown below.
c. SIM card and Micro SD card cover can be secured with screws to prevent loss or theft.

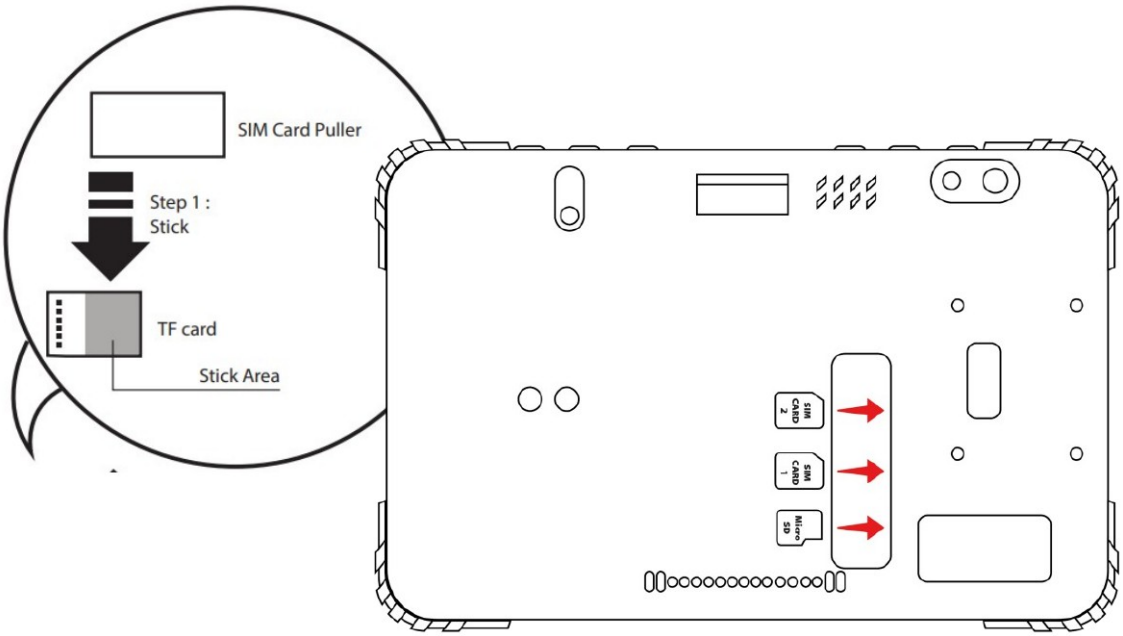

3.3 Charging the Battery

The battery is built-in and cannot be removed by the user.
The battery is partially drained during the transportation. Be sure to charge the battery to full when you are charging it for the first time.

Tips:
In order to ensure the life and performance of the battery, if your tablet has been stored in the warehouse for more than three months, it is recommended to charge the battery every three months.

Topicon HK Limited
2314-2316, Tower C, Huangdu Plaza, Yitian Road, Futian District, Shenzhen 518048, China

3.4 Charging via Vehicle Power Supply

To charge the battery with the vehicle power supply:

a) If the device is used with an optional cradle, place the tablet on the cradle, connect the cradle to the vehicle power supply.

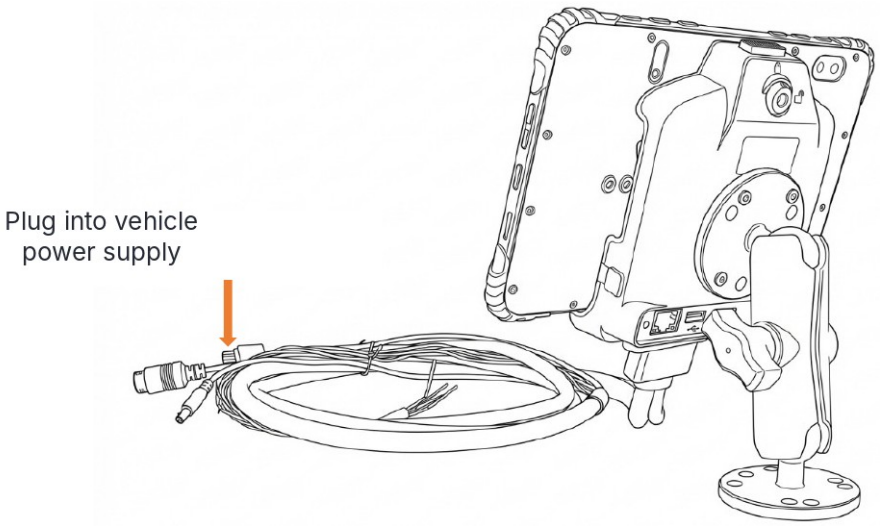

b) The MDT865 could be charged by a PD fast-charging Adapter or car charger (5V/3A, 9V/2A, 12V/2A) by Type C to C USB cable.

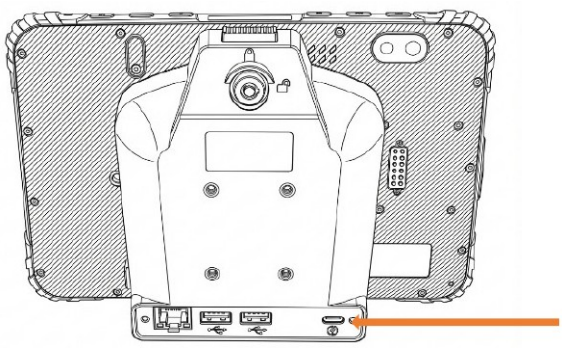

Connect to an AC adapter or car charger (the cradle may not charge if only a standard 5 V/2 A adapter is used)

Warning:

Please ensure that the input voltage of the cradle is within the range of 9V-36V (11V-36V when a camera is connected for video input). If the input voltage of the cradle is outside this range, the MDT865 may be unable to charge or damaged. This may void the warranty.

Topicon HK Limited
2314-2316, Tower C, Huangdu Plaza, Yitian Road, Futian District, Shenzhen 518048, China

Chapter 4: Hand strap and shoulder strap mode

4.1 Hand strap

1. How to install

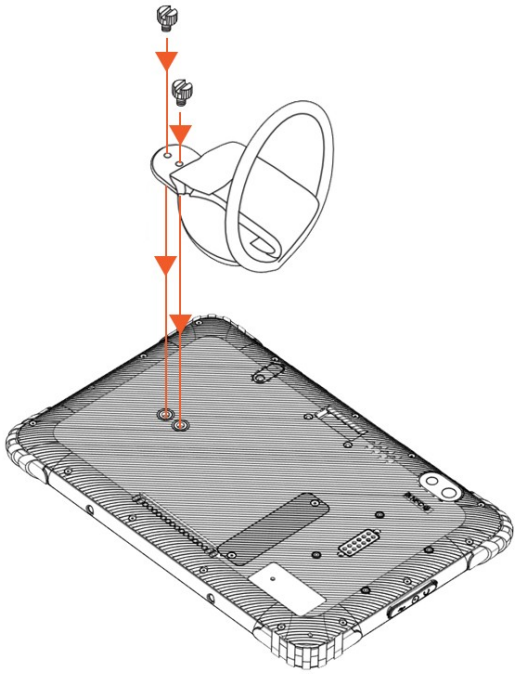

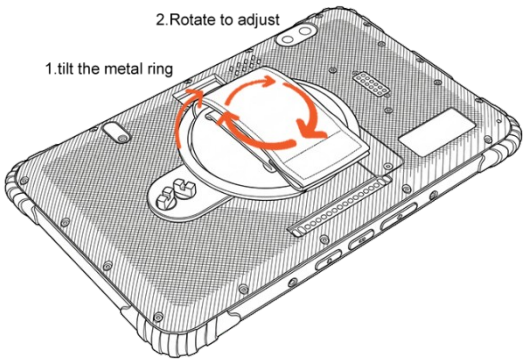

2. How to use

Easy to carry

Topicon HK Limited
2314-2316, Tower C, Huangdu Plaza, Yitian Road, Futian District, Shenzhen 518048, China

1 Horizontal viewing stand

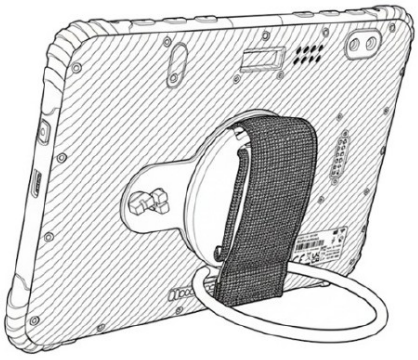

2 Vertical viewing stand

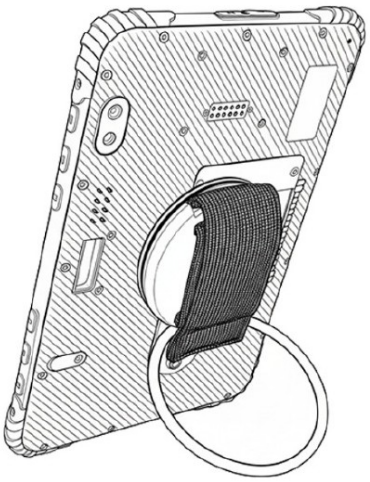

3 Adjustable viewing hand strap

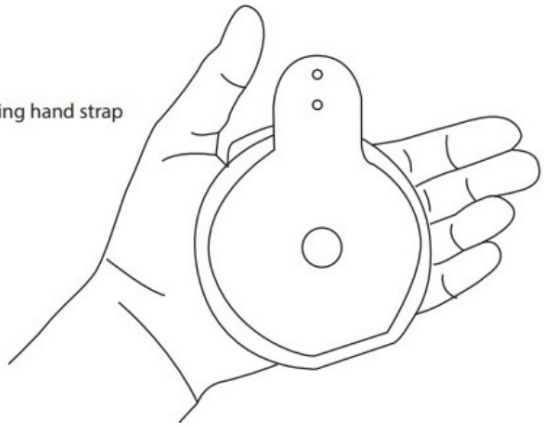

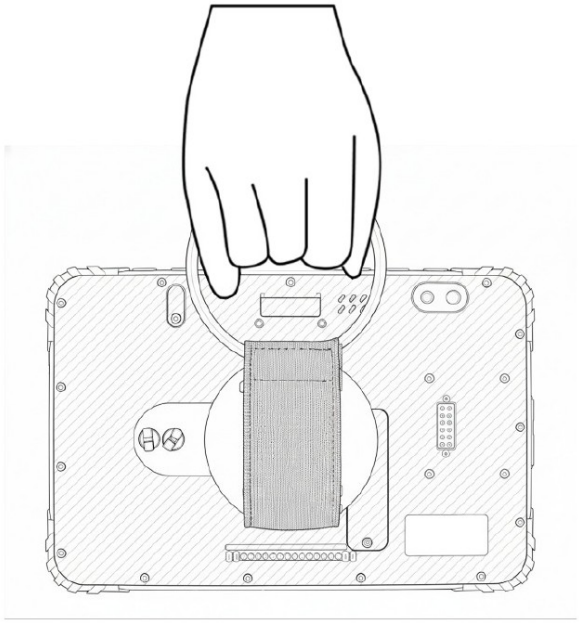

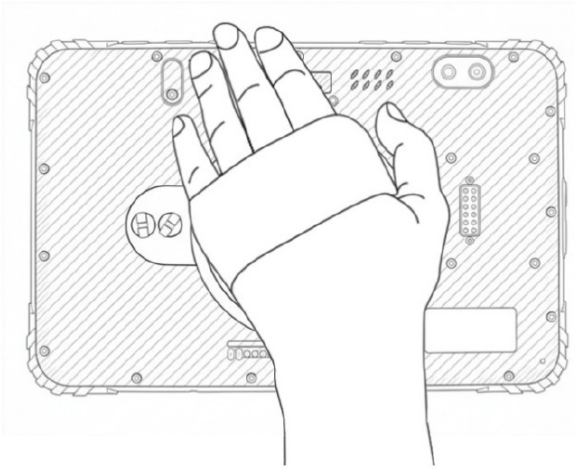

Topicon HK Limited
2314-2316, Tower C, Huangdu Plaza, Yitian Road, Futian District, Shenzhen 518048, China

4.2 Shoulder strap mode

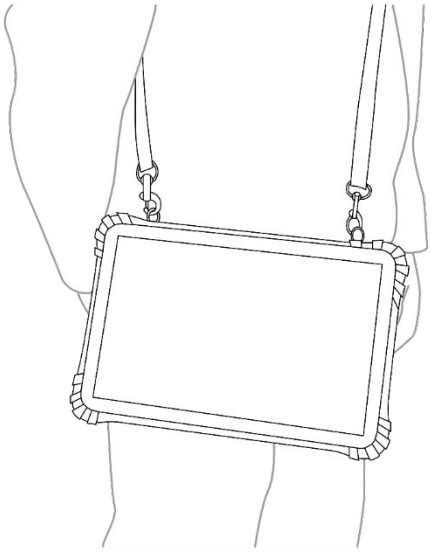

Topicon HK Limited
2314-2316, Tower C, Huangdu Plaza, Yitian Road, Futian District, Shenzhen 518048, China

Chapter 5: Using the Docking Station

5.1 Vehicle Cradle Mode

1. Mounting the RAM and Cradle

Assemble with cradle (Be a vehicle cradle)

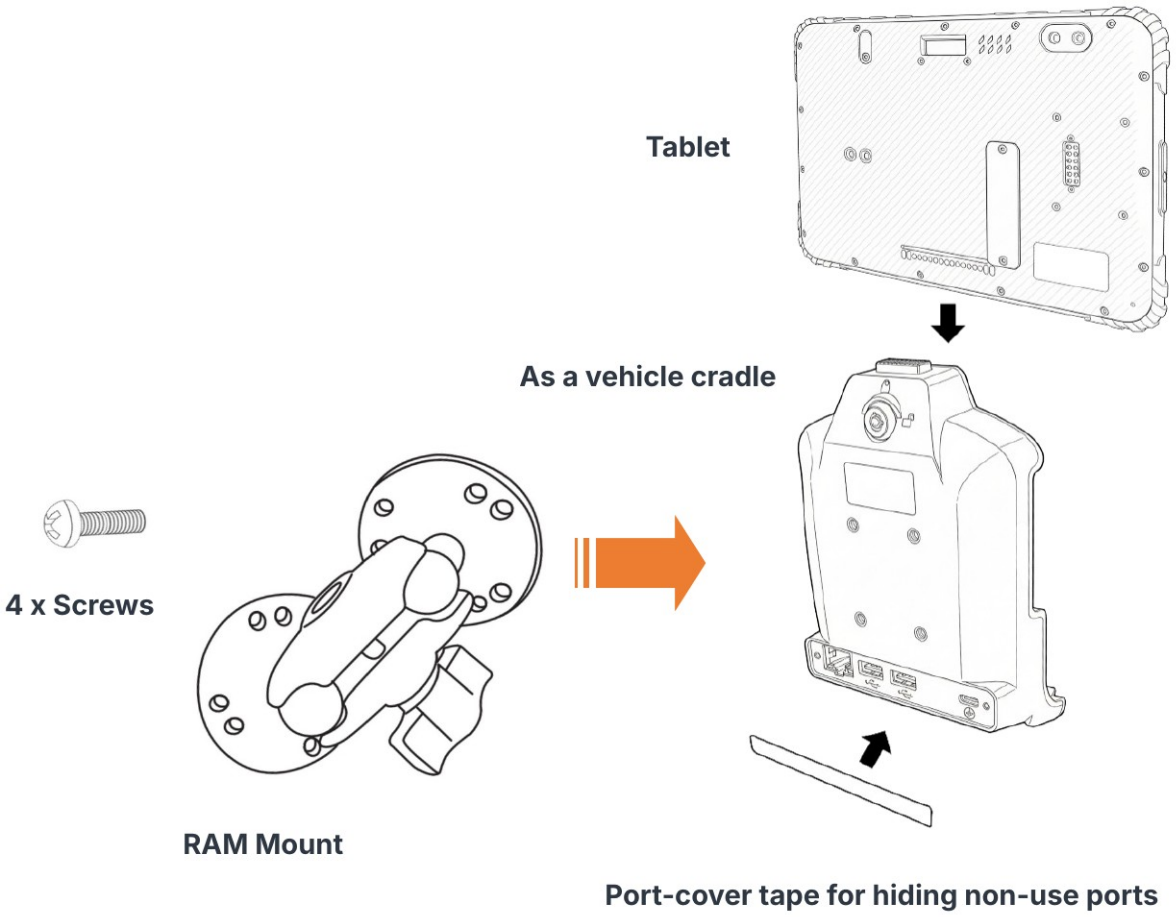

For full-feature vehicle cradle or desktop dock, port cover tape is used to hide non-use ports.

Topicon HK Limited
2314-2316, Tower C, Huangdu Plaza, Yitian Road, Futian District, Shenzhen 518048, China

2. Locking Device & Unlocking device

Insert the key to lock or unlock the device

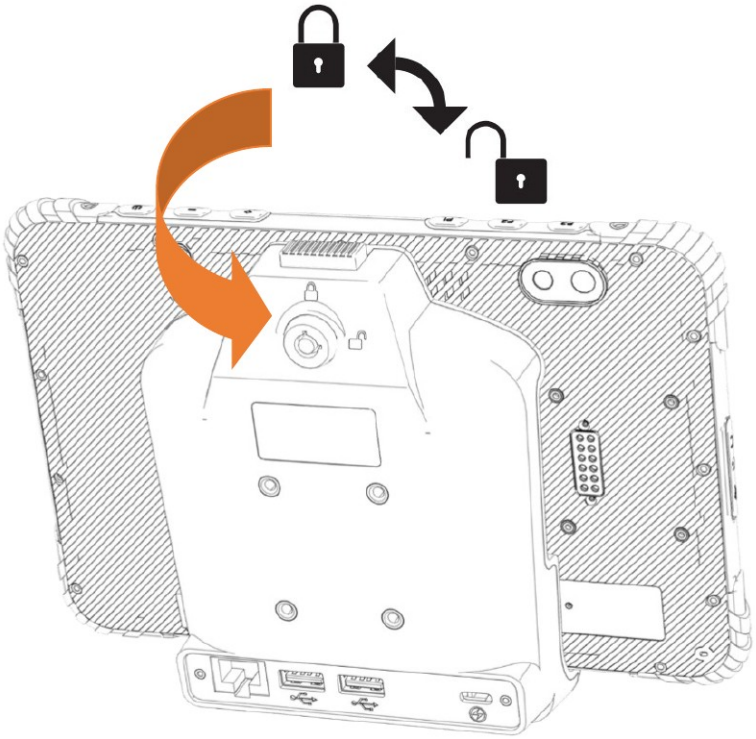

Topicon HK Limited
2314-2316, Tower C, Huangdu Plaza, Yitian Road, Futian District, Shenzhen 518048, China

5.2 Desktop Dock Mode

1. Install the Metal Stand

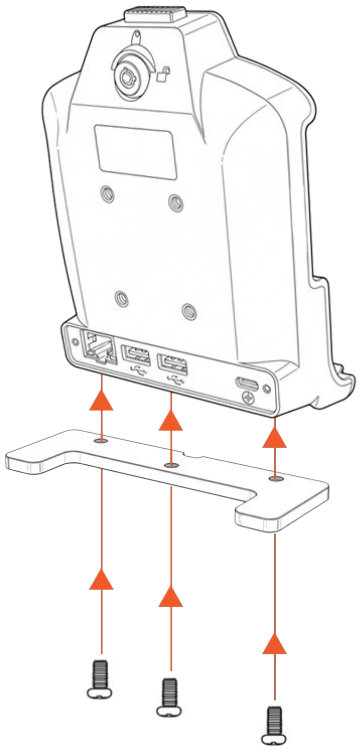

Topicon HK Limited
2314-2316, Tower C, Huangdu Plaza, Yitian Road, Futian District, Shenzhen 518048, China

2. Assemble with cradle (Be a desktop dock station)

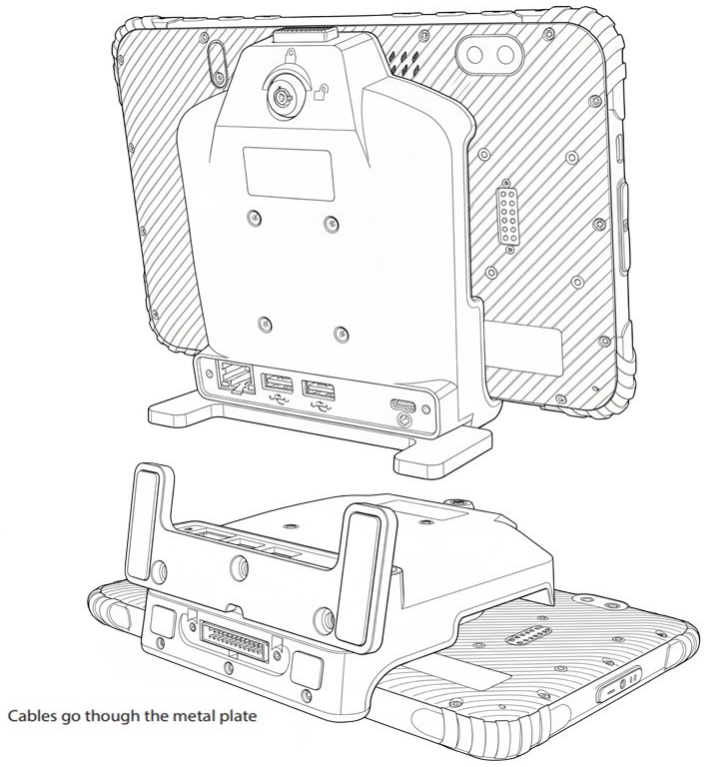

3. Fixed the cable

When installing in a vehicle, use the metal parts below; they serve two purposes.

1. Route the cable toward the back.
2. It provides support, as the device is quite heavy. It will not shake even the car has vibration.

There are few options. If there are supporting at the bottom or at the back (with angle), you can install it in different ways (see the two videos below).

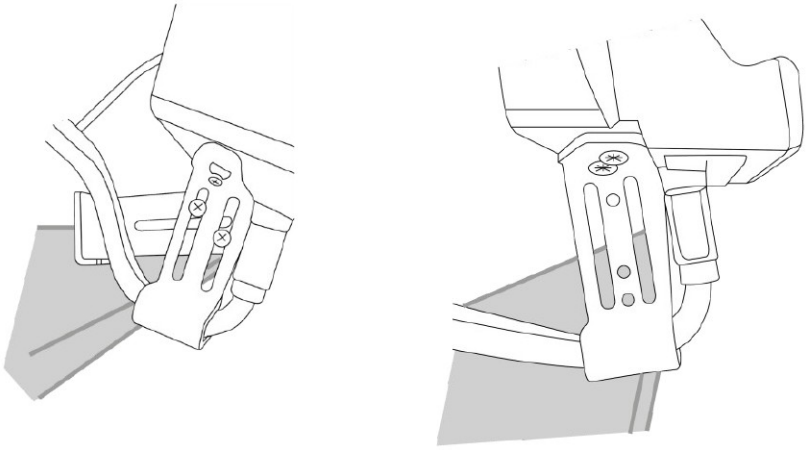

Topicon HK Limited
2314-2316, Tower C, Huangdu Plaza, Yitian Road, Futian District, Shenzhen 518048, China

The length can be adjusted from 50 mm to 80 mm

https://drive.google.com/file/d/1ybp_Ji3AL1t94PQ_KVtJO9mk_J8UiY8Q/view?usp=sharing
https://drive.google.com/file/d/1etWxYVJcbXDs8J-GP0dq8IVuBiYc0t3S/view?usp=sharing

Topicon HK Limited
2314-2316, Tower C, Huangdu Plaza, Yitian Road, Futian District, Shenzhen 518048, China

Chapter 6: Using Hardware Interface

6.1 Using Serial Port

1. RS232 purple/white wires are from CPU, it's same as MDT865 and MDT1065, it can work even no external power supply.

2. RS232 orange/yellow wires and RS485 blue/brown wires are converted from USB Hub and will only work if there is an external power supply.

Wires color	Definition	Device tty ports
White	RS232 RXD (CPU)	/dev/user_external_tty
Purple	RS232 TXD (CPU)	
Orange	RS232 RXD (USB)	/dev/ttyUSB0
Yellow	RS232 TXD (USB)	
Blue	RS485-A	/dev/ttyUSB1
Brown	RS485-B	

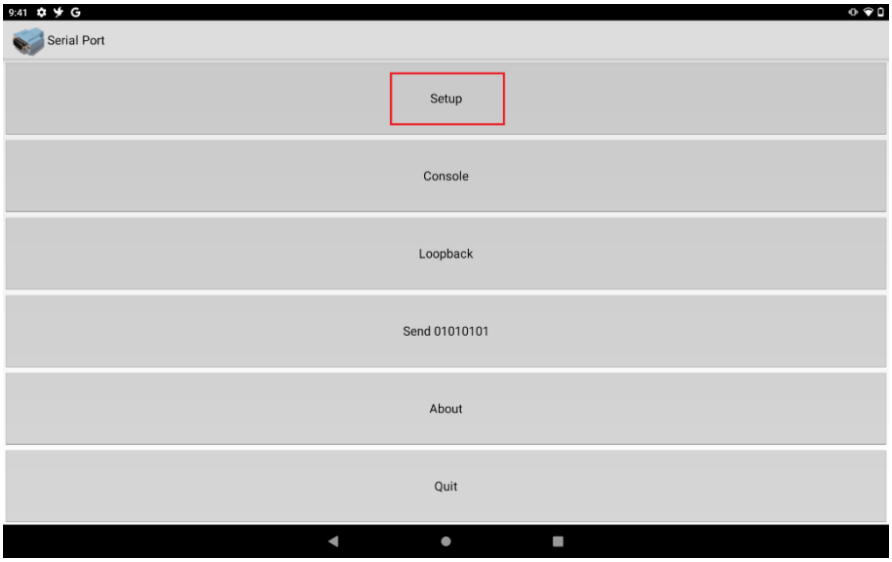

Topicon HK Limited
2314-2316, Tower C, Huangdu Plaza, Yitian Road, Futian District, Shenzhen 518048, China



6.2 Using GPIO

1. GPIO Tail Lines Instruction

Regarding the definition diagram of GPIO interface, please see the details in Chapter 2 “Cradle Cable Pin Assignment Overview”.

2. GPIO_DEMO Instruction

This tool is intended for GPIO testing only and is not suitable for production use.

a. If the input1 or input2 is connected to a high power, key1 or key2 will display “true”
b. Press set output button to open output, and press reset output button to close output.
c. Press get adc button to read the input voltage.
d. Press upgrade button to update the MCU firmware.

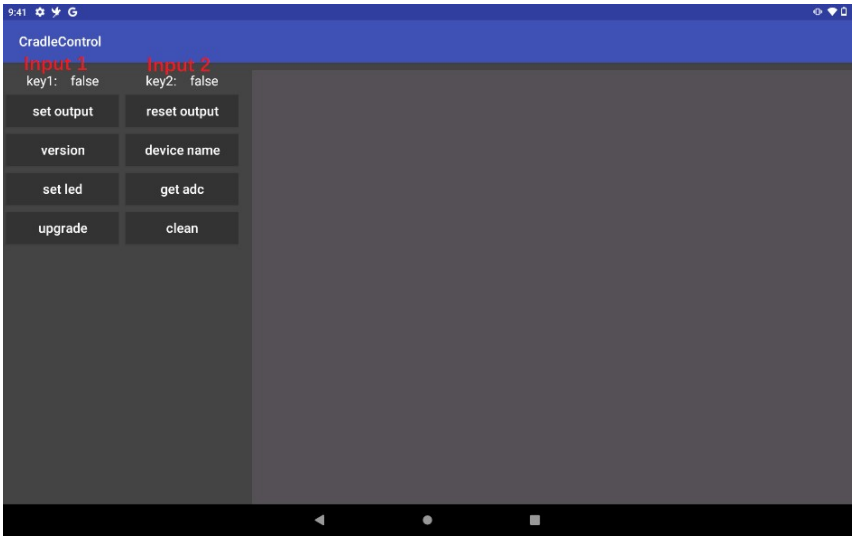

Topicon HK Limited
2314-2316, Tower C, Huangdu Plaza, Yitian Road, Futian District, Shenzhen 518048, China

6.3 Using NFC Function

1. NFC Activation Method

Enable NFC as shown in Figure.

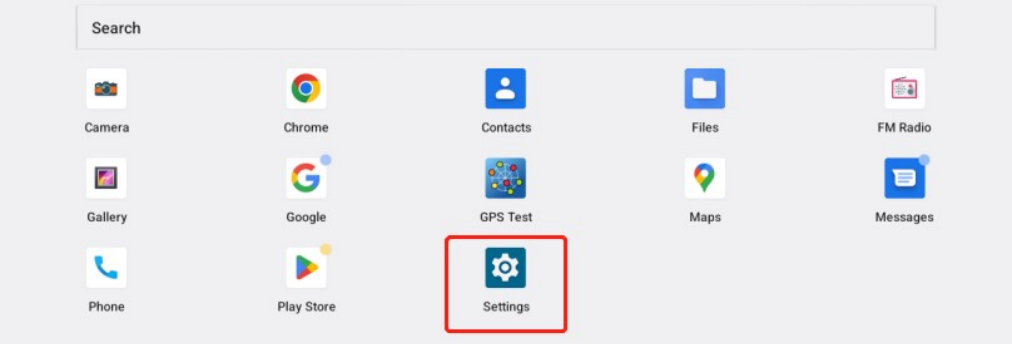

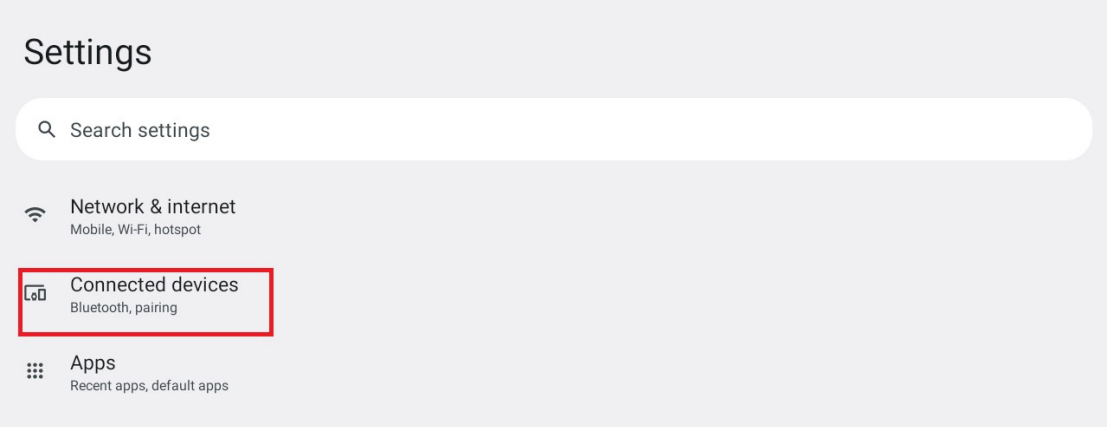

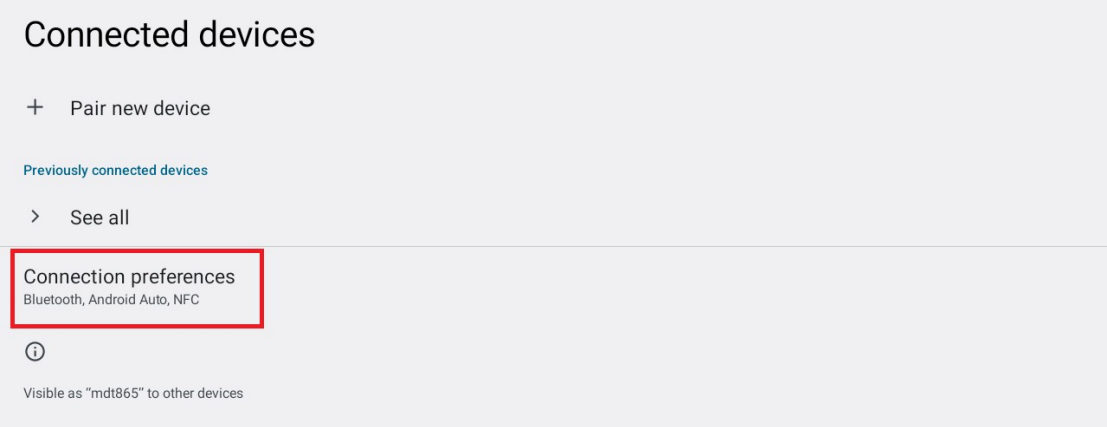

Topicon HK Limited
2314-2316, Tower C, Huangdu Plaza, Yitian Road, Futian District, Shenzhen 518048, China

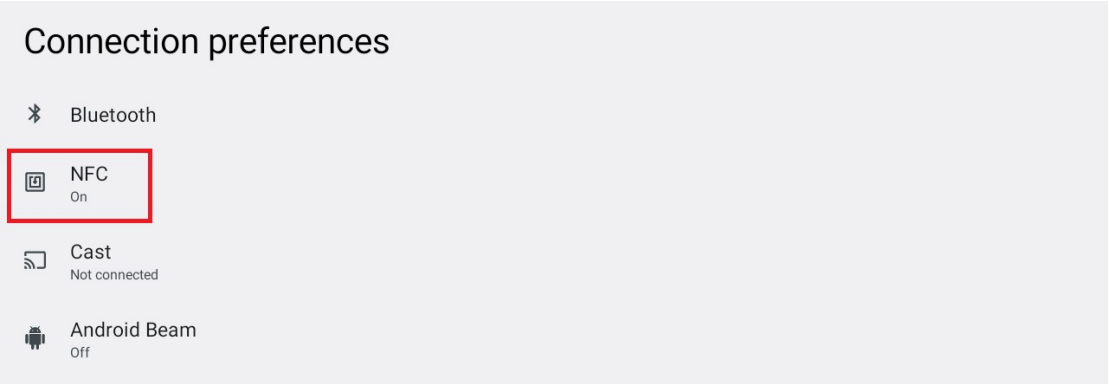

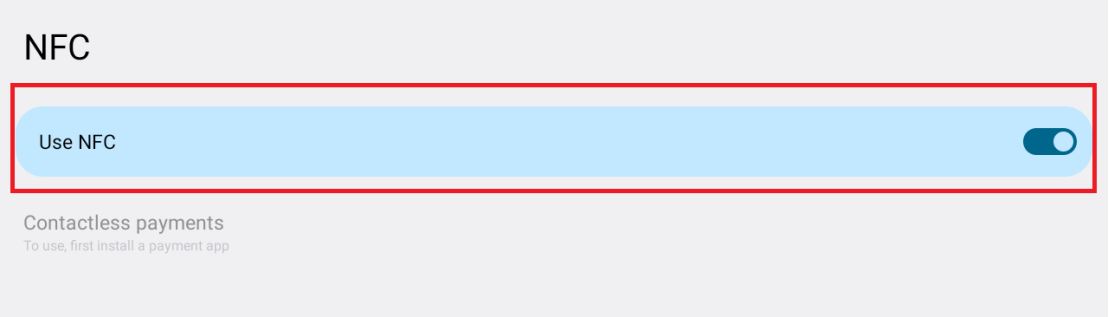

2. NFC Usage Demo

After activating NFC function, place the NFC card close to the induction area. A beep sounds when the card is detected. If the card contains some information (such as manufacturer's information), there will be an interface popped up as shown in figure.

MDT865 NFC

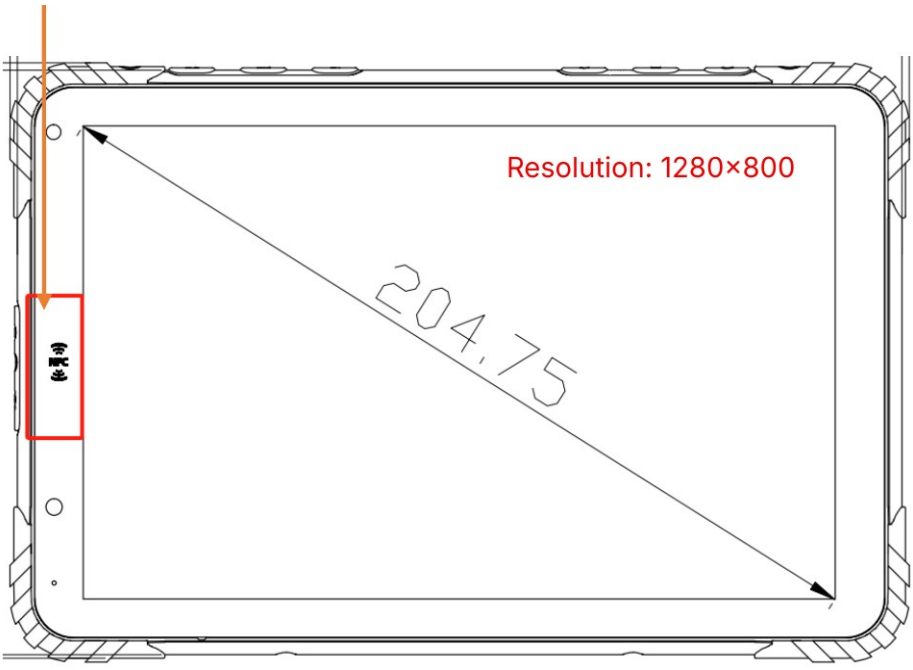

Topicon HK Limited
2314-2316, Tower C, Huangdu Plaza, Yitian Road, Futian District, Shenzhen 518048, China

Chapter 7: Specifications

Durability Features	
IP67 Rating Certified 1.2m / 4 ft. to drop per MIL-STD-810G Raised bezel for LCD impact protection	
LCD Display	
Size	8 Inch Digital IPS Panel
Resolution	1280 x 800
Brightness	1000 cd/m²
Touch screen	
Type	Multi-point Capacitive Touch
System	
CPU	MediaTek 64-bit Octa-core 2x Arm Cortex-A75@2GHz 2x Arm Cortex-A55@1.8GHz
OS	Android 14, Android 16
Memory	4GB LPDDR4X
Storage	64GB eMMC
Audio	2x Integrated microphone
	1x Integrated speaker
	1 x 3.5mm stereo headphone jack
GNSS	GPS
	GLONASS
	GALILEO
WWAN	Supports worldwide band 2G-GSM: 850,900,1800,1900 3G-WCDMA: B1, B2, B4, B5, B8 4G-LTE FDD: B1, B2, B3, B4, B5, B7, B8, B12, B17, B20, B28, B66 4G-LTE TDD: B40, B38, B41
WLAN	802.11a/b/g/n/ac 2.4GHz&5GHz
Ethernet	1x RJ45 Connector on the cradle
Bluetooth	2402MHz-2480MHz Integrated Bluetooth V5.0, with HID, A2DP, AVRCP, BIP, BPP, FTP, HFP, HSP, OPP, SPP supported
Sensor	Gyroscope
	Accelerometer (G-sensor)
	Compass
	Light Sensor

Topicon HK Limited
2314-2316, Tower C, Huangdu Plaza, Yitian Road, Futian District, Shenzhen 518048, China

NFC	• Active and passive Peer-to-Peer – ISO/IEC 18092 - NFCIP-1 Initiator & Target • Passive mode – Reader/Writer – NFC Forum Type 1/2/3/4/5 tags – ISO/IEC 15693 – MIFARE Classic – Thin film (ex Kovio) Barcode • Active mode – Card Emulation – ISO/IEC 14443 Type A & B – JIS X 6319 – 4 – MIFARE Classic through SWP-CLT
Camera	Rear Camera: 20MP
Video input (optional)	Support 1 x up to 1080p AHD camera with cradle Support 4 x up to 1080p AHD camera with camera hub
Barcode scanner (optional)	Barcode module (Motorola SE4107) 1D / 2D Barcodes can be scanned.
LoRa (optional)	LoRa module
I/O Interface (standard)	
Serial Port	1 x RS232 and 1 x RS232/RS485 (with dock)
USB Port	1 x USB 2.0 Type-C (Host or Device) (can't be used when put on the docking station) 2 x USB Type-A 2.0 OTG on the full features cradle
SD Slot	1 x Micro SD card, up to 512 GB
SIM Socket	2 x Nano SIM Card slot
Power Supply	
Power System	Power by AC Adapter (PD Fast-charging 5V/3A 9V/2A 12V/2A)
	Power by docking station 9-36V input (11-36V when a camera is connected for video input)
Battery Type	Lithium-ion rechargeable battery
Battery Capacity	3.8V 8000 mAh
Mechanical & Environmental	
Operating Temp.	-20°C - 60°C (-4°F - 140°F)
Storage Temp.	-20°C - 70°C (-4°F - 158°F)
Operating Humidity	90% RH (non-condensing)
Dimensions	207 mm L x 138 mm W x 17 mm D
Weight Tablet	604 g

Topicon HK Limited
2314-2316, Tower C, Huangdu Plaza, Yitian Road, Futian District, Shenzhen 518048, China

Chapter 8: Software Support

Demo application and source code available

We can provide demo applications such as reading ignition status, AVIN camera, Serial port, GPIO, barcode scanner and NFC etc. Please contact our Sales for details.

Supplementary APIs

https://docs.google.com/document/d/1Gexs5OU_HRoFK5F3bM27-OLFCvJYQcGmbgqCqNcvaNw/edit?usp=sharing

Example source code and applications are provided.

Serial port access

Package installation

Power management

Cradle detection

Notification blocker

Additional IOs

Programmatic firmware upgrade and configuration

How to use the hotspot proxy

GPIO of Cradle CRD865 and CRD1065

How to Prevent Repeated USB Permission Pop-ups - Android Application Configuration Guide

Enable Roaming Proxy

UnmountProxy APK (mount/unmount SD card)

Customization Services

Topicon's device management server lets customers update firmware and enable kiosk mode:

- BOOT ANIMATION
- INSTALL APK
- ADD APN
- DEFAULT SETTING
- CUSTOMIZED BUTTON

For details, please refer to Remote control server manual and Kiosk mode quick start guide.

Remote control server manual

Kiosk mode quick start guide

Topicon HK Limited
2314-2316, Tower C, Huangdu Plaza, Yitian Road, Futian District, Shenzhen 518048, China

Chapter 9: Radio Parameters

Bands Covered by the CE Test Report

Note: The bands listed above are those covered by the CE (RED) test report. The complete list of operating bands is given in Chapter 7 (“Supports worldwide band”); bands not listed here are supported by the module but are not included in this test report. Maximum RF output power per band is stated above.

Model No: MDT865	
Technical Characteristics of EUT	
2G	
Support Networks:	GSM, GPRS, EDGE
Support Bands:	GSM900, DCS1800
Frequency Range:	GSM900: Tx: 880-915MHz, Rx: 925-960MHz
	DCS1800: Tx: 1710-1785MHz, Rx: 1805-1880MHz
RF Output Power:	GSM900: 32.80dBm, GSM1800: 31.06dBm EDGE900: 26.89dBm, EDGE1800: 26.97dBm
Modulation Type:	GMSK, 8PSK
Type of Antenna:	Integral Antenna
Antenna Gain:	GSM900: 0.7dBi, DCS1800:1.42dBi
GPRS/EDGE Class:	Class 12
3G	
Support Networks:	WCDMA, HSDPA, HSUPA
Support Bands:	WCDMA Band 1, WCDMA Band 8
Frequency Range:	WCDMA Band 1: Tx: 1920-1980MHz, Rx: 2110-2170MHz
	WCDMA Band 8: Tx: 880-915MHz, Rx: 925-960MHz
RF Output Power:	WCDMA Band 1: 24.03dBm, WCDMA Band 8: 22.95dBm
Modulation Type:	BPSK, QPSK, 16QAM
Antenna Type:	Integral Antenna
Antenna Gain:	WCDMA Band 1: 1.72dBi, WCDMA Band 8: 0.7dBi
4G	
Support Bands:	FDD-LTE Band1, 3, 7, 8, 20, 28 TDD-LTE Band 38, 40
Frequency Range:	FDD-LTE Band 1: Tx: 1920-1980MHz, Rx: 2110-2170MHz
	FDD-LTE Band 3: Tx: 1710-1785MHz, Rx: 1805-1880MHz
	FDD-LTE Band 7: Tx: 2500-2570MHz, Rx: 2620-2690MHz
	FDD-LTE Band 8: Tx: 880-915MHz, Rx: 925-960MHz
	FDD-LTE Band 20: Tx: 832-862MHz, Rx: 791-821MHz
	FDD-LTE Band 28: Tx: 703-748MHz, Rx: 758-803MHz
	TDD-LTE Band 38: Tx: 2570-2620MHz, Rx: 2570-2620MHz
	TDD-LTE Band 40: Tx: 2300-2400MHz, Rx: 2300-2400MHz

Max.RF Output Power:	FDD-LTE Band 1: 23.65dBm, FDD-LTE Band 3: 23.31dBm, FDD-LTE Band 7: 24.11dBm, FDD-LTE Band 8: 23.44dBm , FDD-LTE Band 20: 23.31dBm , FDD-LTE Band 28: 23.34dBm , TDD-LTE Band 38: 24.19dBm, TDD-LTE Band 40: 23.68dBm
Modulation Type:	QPSK, 16QAM
Antenna Type:	Integral Antenna
Antenna Gain:	FDD-LTE Band 1: 1.72dBi, FDD-LTE Band 3: 1.42dBi, FDD-LTE Band 7: 0.08dBi, FDD-LTE Band 8: 0.7dBi, FDD-LTE Band 20: 0.6dBi, FDD-LTE Band 28: -2.28dBi, TDD-LTE Band 38: -0.34dBi, TDD-LTE Band 40:0.56dBi,
Bluetooth	
Bluetooth Version:	Bluetooth V5.0
Frequency Range:	2402-2480MHz
Max.RF Output Power:	9.46dBm (EIRP)
Type of Modulation:	GFSK, π/4 DQPSK, 8DPSK
Data Rate:	1Mbps, 2Mbps, 3Mbps
Quantity of Channels	79/40
Channel Separation:	1MHz/2MHz
Type of Antenna:	Integral Antenna
Antenna Gain:	2.59dBi
Wi-Fi (2.4GHz)	
Support Standards:	802.11b, 802.11g, 802.11n-HT20/40
Frequency Range:	2412-2472MHz for 802.11b/g/n(HT20) 2422-2462MHz for 802.11n(HT40)
Max.RF Output Power:	15.39dBm (EIRP)
Type of Modulation:	CCK, OFDM, QPSK, BPSK, 16QAM, 64QAM
Quantity of Channels	13 for 802.11b/g/n(HT20), 9 for 802.11n(HT40)
Channel Separation:	5MHz
Type of Antenna:	Integral Antenna
Antenna Gain:	1.46dBi
NFC	
Frequency Range:	13.56MHz
Radiated H-Field:	14.49dBuA/m(@3m)
Type of Antenna:	Integral Antenna
Antenna Gain:	0dBi
Transmitter Product Class	1
LORA	
Frequency Range:	868.00MHz-868.6 MHz 869.4MHz-869.650 MHz

Topicon HK Limited
2314-2316, Tower C, Huangdu Plaza, Yitian Road, Futian District, Shenzhen 518048, China

RF Output Power:	868.1MHz: 13.04dBm(ERP) 868.3MHz : 13.03dBm(ERP) 868.5MHz: 13.02dBm(ERP) 869.525MHz: 13.06 dBm(ERP)
Type of Modulation:	FSK
Type of Antenna:	Integral Antenna
Antenna Gain:	2dBi
Receiver Categories:	2
GPS	
Frequency Range:	1575.42MHz

Chapter 10: Safety and regulatory compliance

FCC RF Exposure Information and Statement

This device meets the government's requirements for exposure to radio waves.
The guidelines are based on standards that were developed by independent scientific organizations through periodic and thorough evaluation of scientific studies.
The standards include a substantial safety margin designed to assure the safety of all persons regardless of age or health.
The SAR limit of USA (FCC) is 1.6 W/kg averaged.
Device types: portable device has also been tested against this SAR limit.
SAR information on this and other tablets can be viewed on-line at
http://www.fcc.gov/oet/ea/fccid/.
Please use the device FCC ID number for search.
This device was tested in a typical body-worn configuration at 0 mm separation.
To maintain compliance with FCC RF exposure requirements, the use of accessories should maintain a separation distance between the user's body and the device.

FCC Warning

This device complies with Part 15 of the FCC Rules. Operation is subject to the following two conditions:
(1) This device may not cause harmful interference
(2) This device must accept any interference received, including interference that may cause undesired operation.

NOTE 1: This equipment has been tested and found to comply with the limits for a Class B digital device, pursuant to part 15 of the FCC Rules. These limits are designed to provide reasonable protection against harmful interference in a residential installation.
This equipment generates, uses and can radiate radio frequency energy and, if not installed and used in accordance with the instructions, may cause harmful interference to radio communications. However, there is no guarantee that interference will not occur in a particular installation. If this equipment does cause harmful interference to radio or television reception, which can be determined by turning the equipment off and on, the user is encouraged to try to correct the interference by one or more of the following measures:

Topicon HK Limited
2314-2316, Tower C, Huangdu Plaza, Yitian Road, Futian District, Shenzhen 518048, China

- Reorient or relocate the receiving antenna.
- Increase the separation between the equipment and receiver.
- Connect the equipment into an outlet on a circuit different from that to which the receiver is connected.
- Consult the dealer or an experienced radio/TV technician for help.

NOTE 2: Any changes or modification to this unit not expressly approved by the party responsible for compliance could void the user's authority to operate the equipment.

CE

The product shall only be connected to a USB interface of version USB2.0 and that the connection to a power USB is allowed. Use caution when using earphones maybe possible excessive sound pressure from earphones and headphones can cause hearing loss.



CAUTION
RISK OF EXPLOSION IF BATTERY IS REPLACED BY AN INCORRECT TYPE.
DISPOSE OF USED BATTERIES ACCORDING TO THE INSTRUCTIONS

IC Warning

This device contains license-exempt transmitter(s) that comply with Innovation, Science and Economic Development Canada's license-exempt RSS(s). Operation is subject to the following two conditions:
(1) This device may not cause interference.
(2) This device must accept any interference, including interference that may cause undesired operation of the device.

L'émetteur/récepteur exempt de licence contenu dans le présent appareil est conforme aux CNR d'Innovation, Sciences et Développement économique Canada applicables aux appareils radio exempts de licence.
L'exploitation est autorisée aux deux conditions suivantes:
1. L'appareil ne doit pas produire de brouillage;
2. L'appareil doit accepter tout brouillage radioélectrique subi, même si le brouillage est susceptible d'en compromettre le fonctionnement.

This Class B digital apparatus complies with Canadian ICES-003.
Cet appareil numérique de la classe B est conforme à la norme NMB-003 du Canada.

This equipment complies with IC RSS-102 radiation exposure limits set forth for an uncontrolled environment. The guidelines are based on standards that were developed by independent scientific organizations through periodic and thorough evaluation of scientific studies. The standards include a substantial safety margin designed to assure the safety of all persons regardless of age or health. The SAR limit of IC is 1.6 W/kg averaged.
Device: Tablet (IC: 21087-MDT865) has also been tested against this SAR limit.

Topicon HK Limited
2314-2316, Tower C, Huangdu Plaza, Yitian Road, Futian District, Shenzhen 518048, China

This device was tested simulation typical 0 mm to body. To maintain compliance with RF exposure requirements, the use of accessories should not contain metallic components in its assembly, the use of accessories that do not satisfy these requirements may not comply with RF exposure requirements, and should be avoided. The highest reported body SAR value is 1.183 W/kg.

L'équipement est conforme aux limites d'exposition aux rayonnements ambiants non contrôlés spécifiées dans le document IC RSS-102. Ces lignes directrices sont fondées sur des critères établis par des organisations scientifiques indépendantes par le biais d'évaluations périodiques et approfondies de la recherche scientifique. Ces normes comportent une marge de sécurité importante et visent à assurer la sécurité de tous, quel que soit leur âge ou leur état de santé. La limite SAR pour IC est en moyenne de 1,6 W/kg. Équipement: Tablet (IC: 21087-MDT865) a également été testé conformément à cette limite SAR. L'appareil a fait l'objet d'essais de simulation, généralement à une distance de 0 mm. Afin de maintenir la conformité aux exigences en matière d'exposition aux radiofréquences, les composants qui utilisent des accessoires ne doivent pas contenir de pièces métalliques et les accessoires qui ne satisfont pas à ces exigences peuvent ne pas être conformes aux exigences en matière d'exposition aux radiofréquences et doivent être évités. Les valeurs SAR les plus élevées rapportées pour l'état physique des fonctions individuelles étaient respectivement de 1.183W/kg.

Topicon HK Limited
2314-2316, Tower C, Huangdu Plaza, Yitian Road, Futian District, Shenzhen 518048, China